BRICK CRAFT®

ELEPHANT & PIGGIE

72803

Includes **Reusable Stickers!**

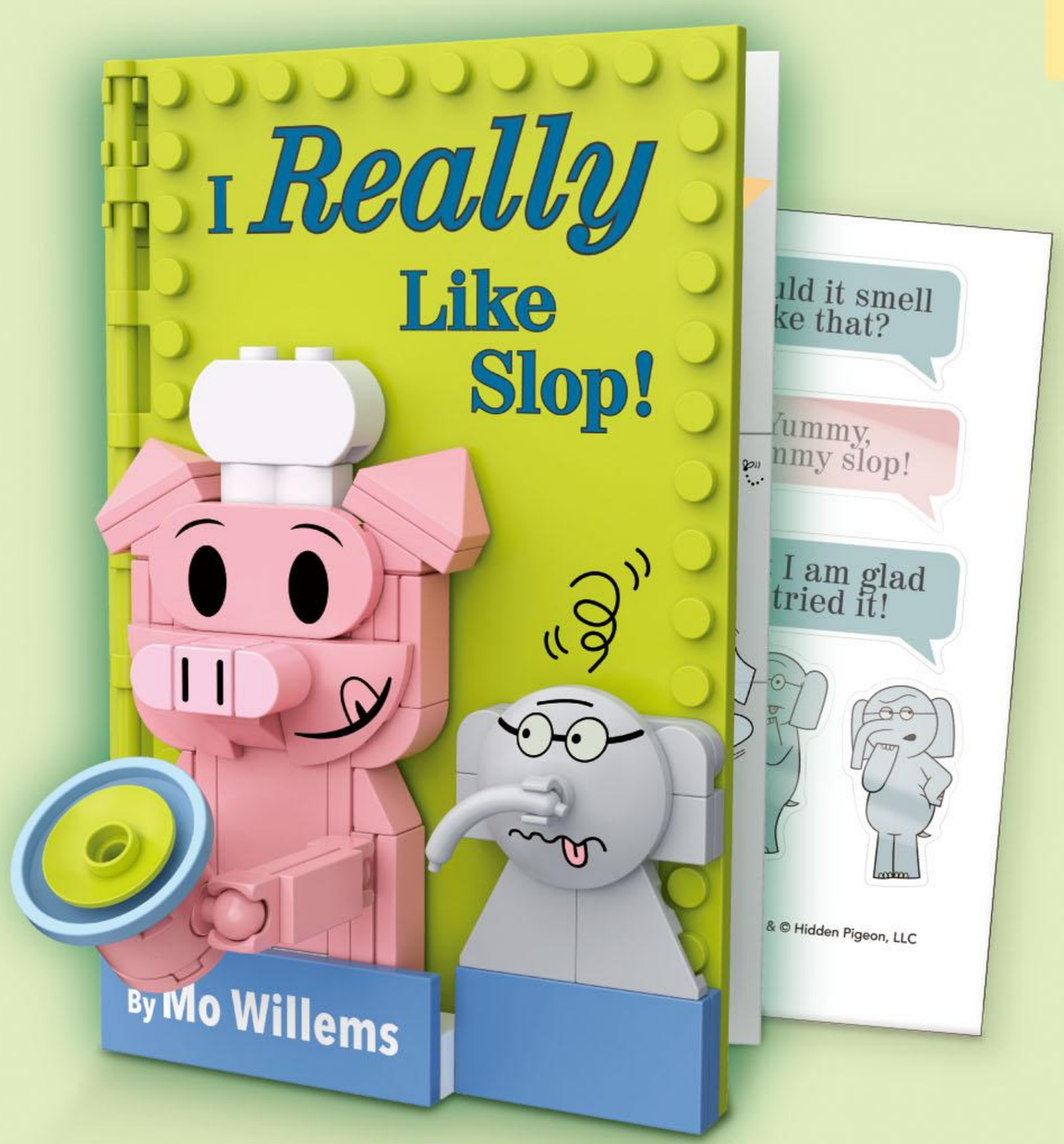



Build A Book: I Really Like Slop!

BRICKCRAFT®

shopbrickcraft.com

JOIN THE BRICKCRAFT COMMUNITY

Building just got more exciting. We've got surprises, special deals, and insider perks just for you!

Scan the QR code to get in on the fun—plus, snag an exclusive discount on your first online order!

Scan the QR code with your phone's camera.

Or open your browser and go to **shopbrickcraft.com/community** to sign up and learn more!



BRICK CRAFT®

ELEPHANT & PIGGIE







CHECK OUT THE ENTIRE COLLECTION AT:

shopbrickcraft.com

STUD MEASUREMENT GUIDE

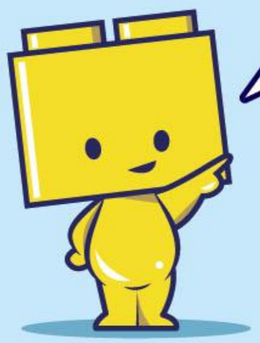

MEASURE your PIECES.

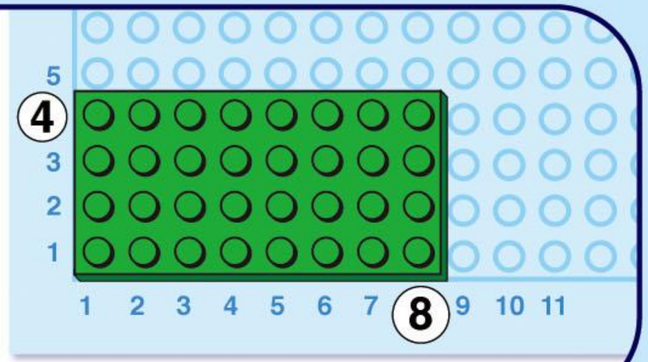

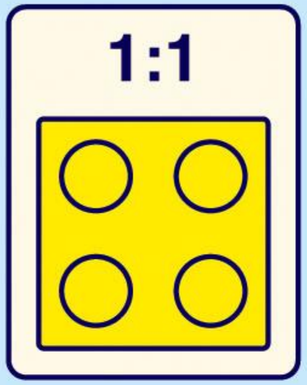

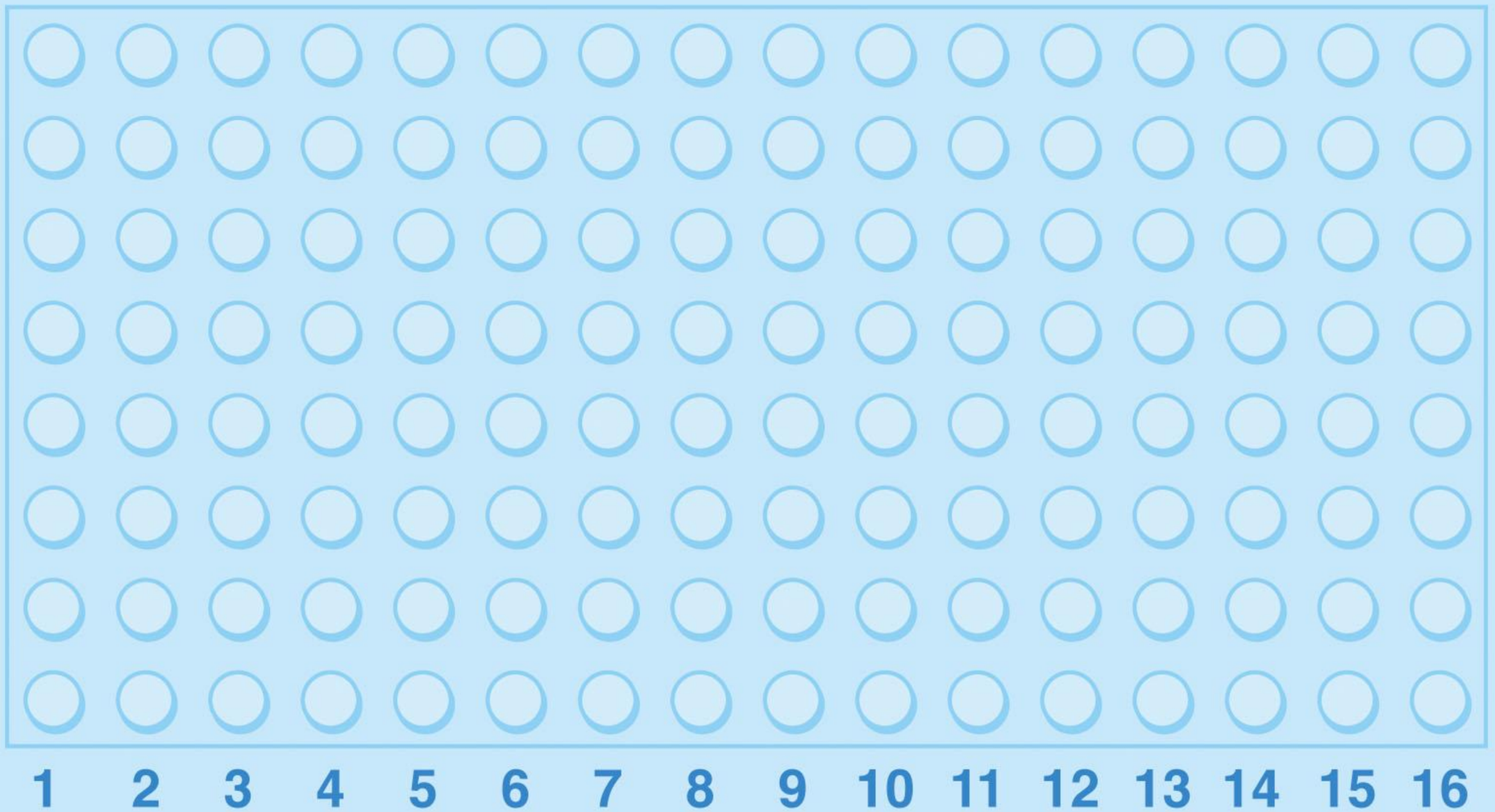

1

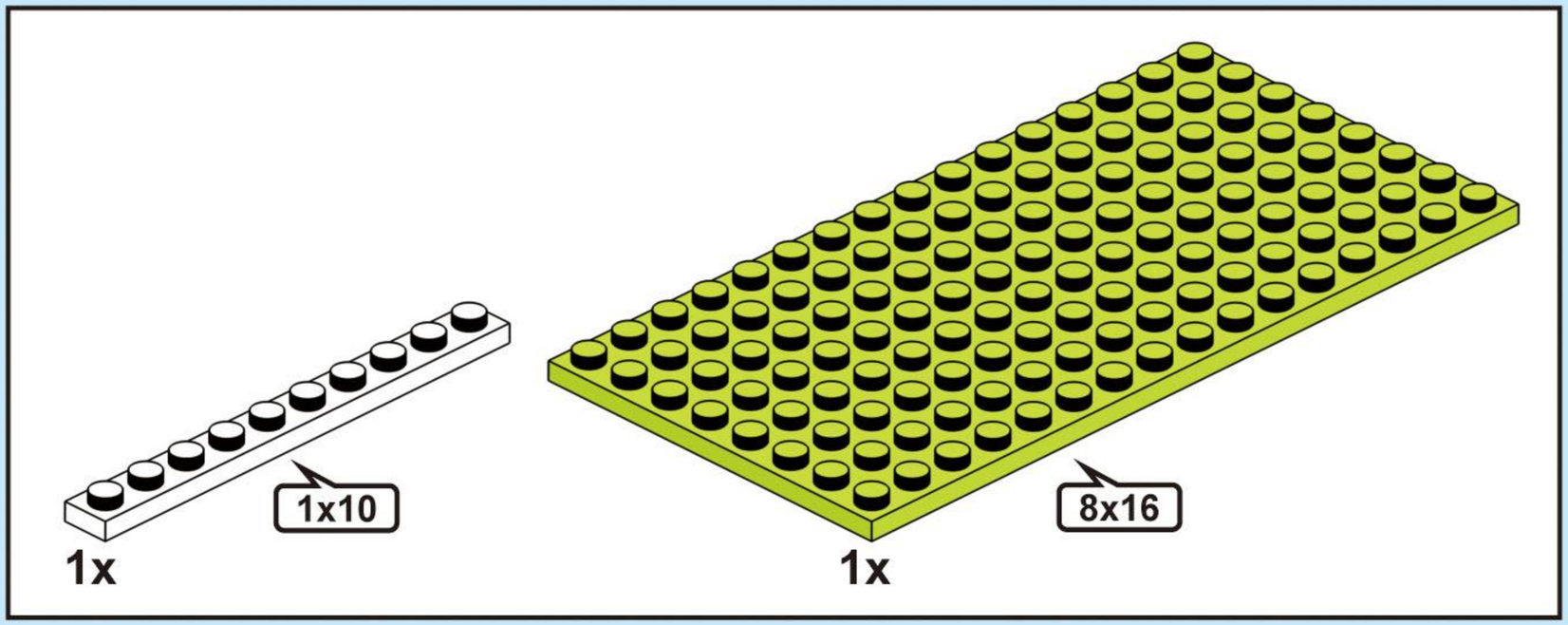

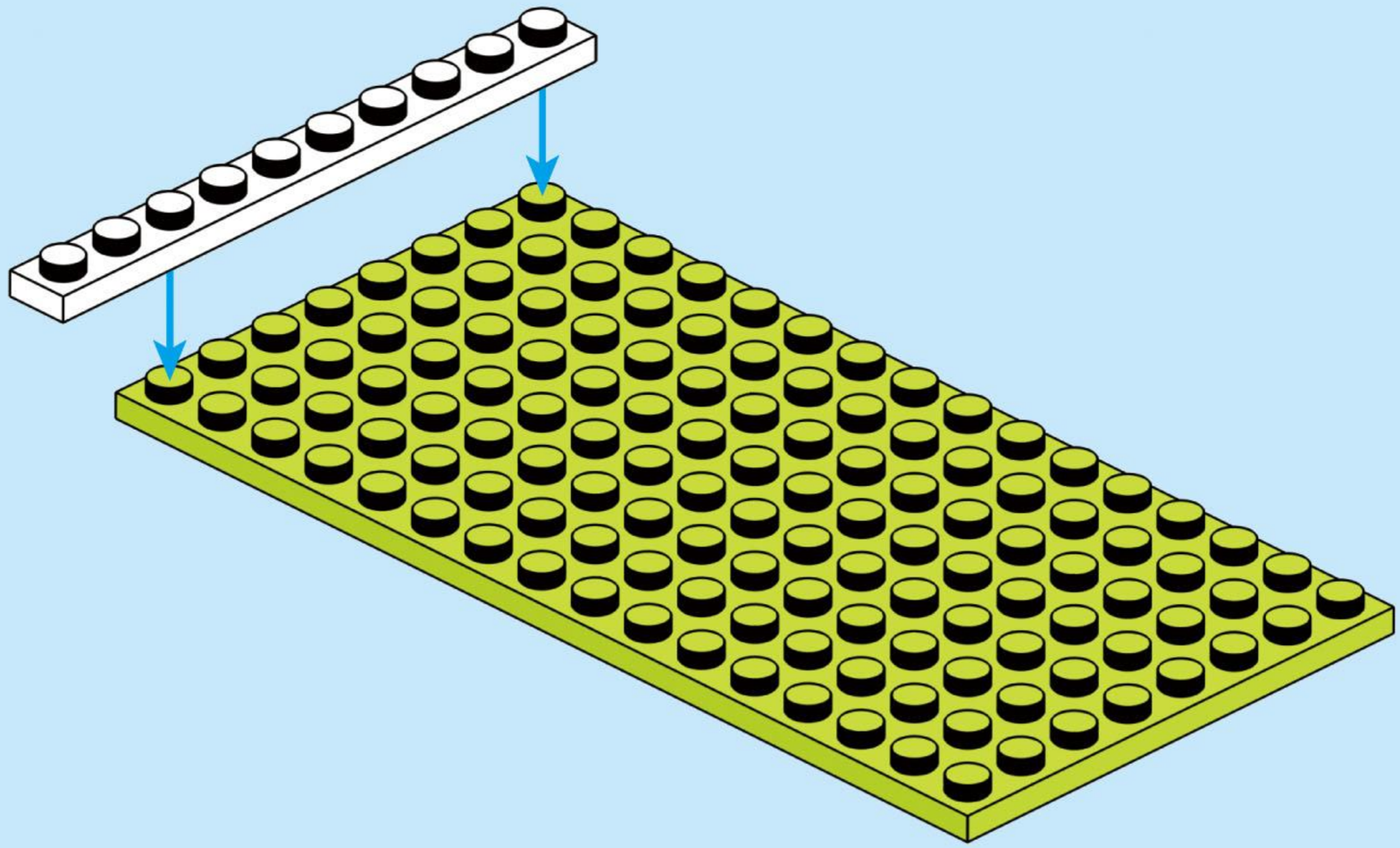

2

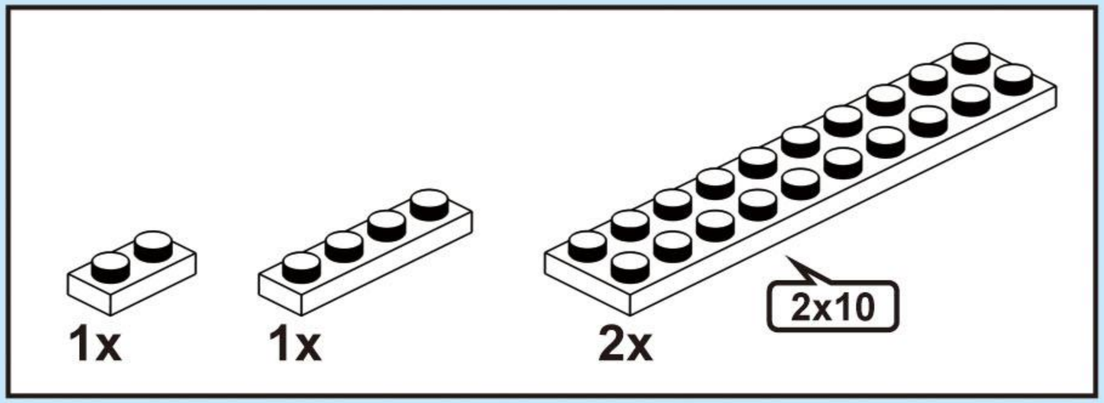

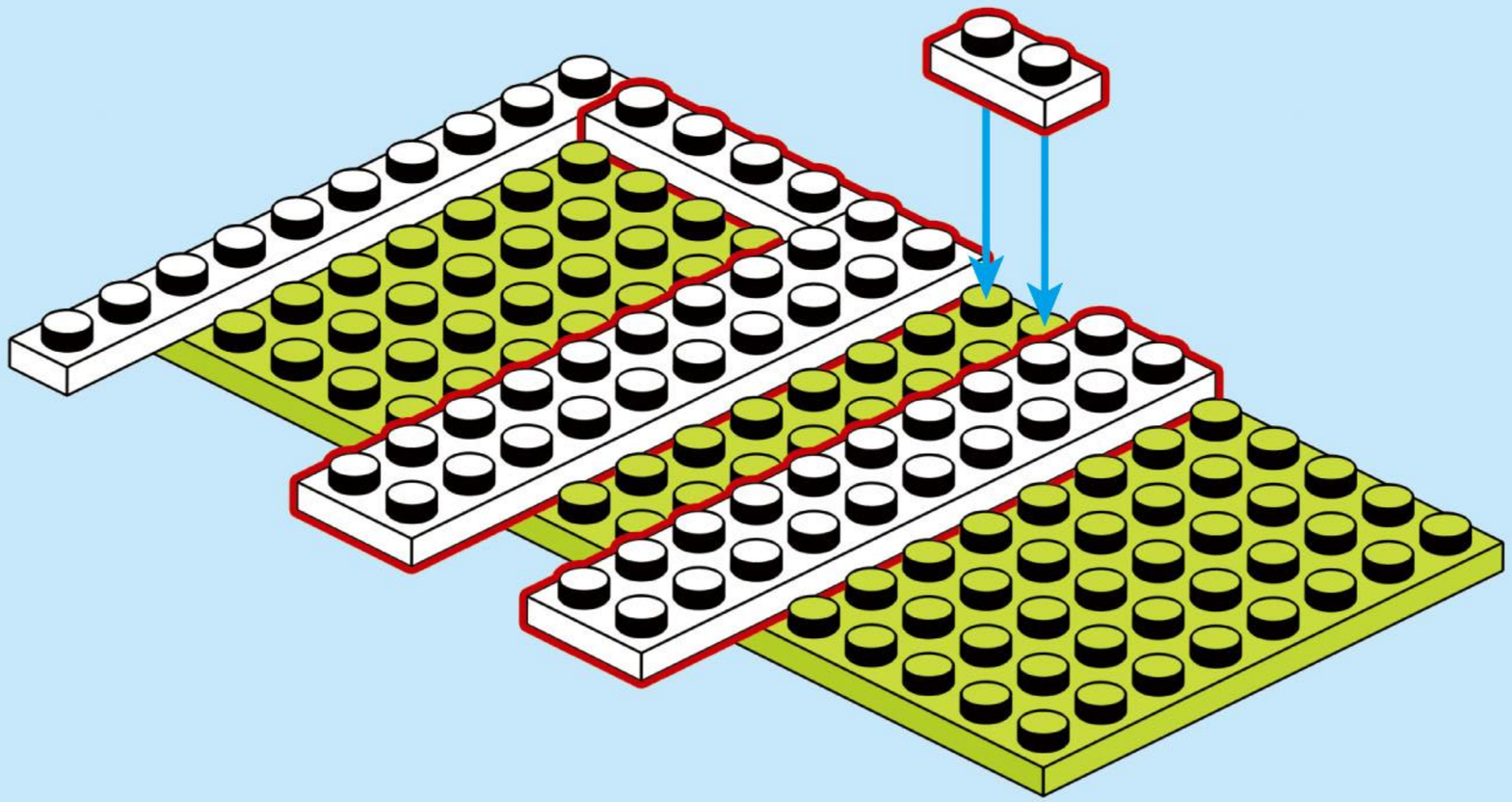

3

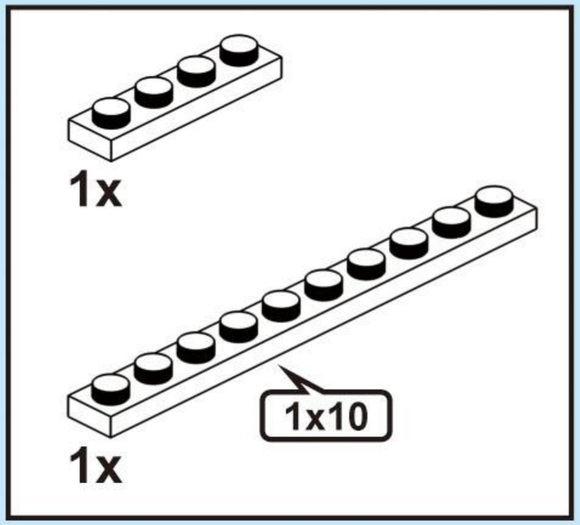

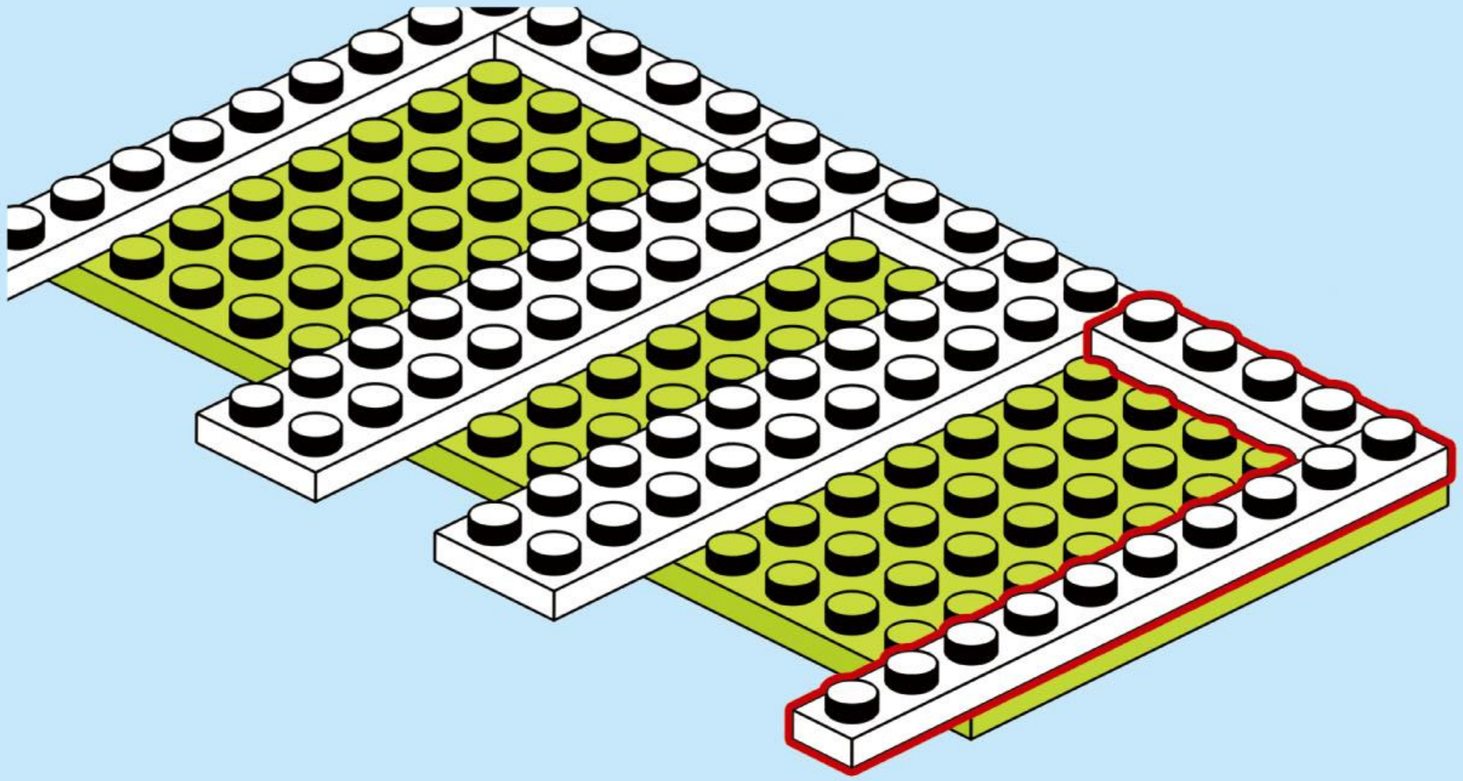

4

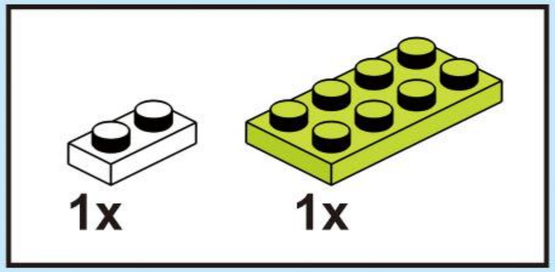

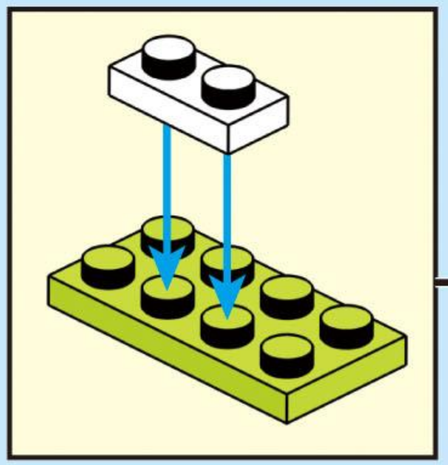

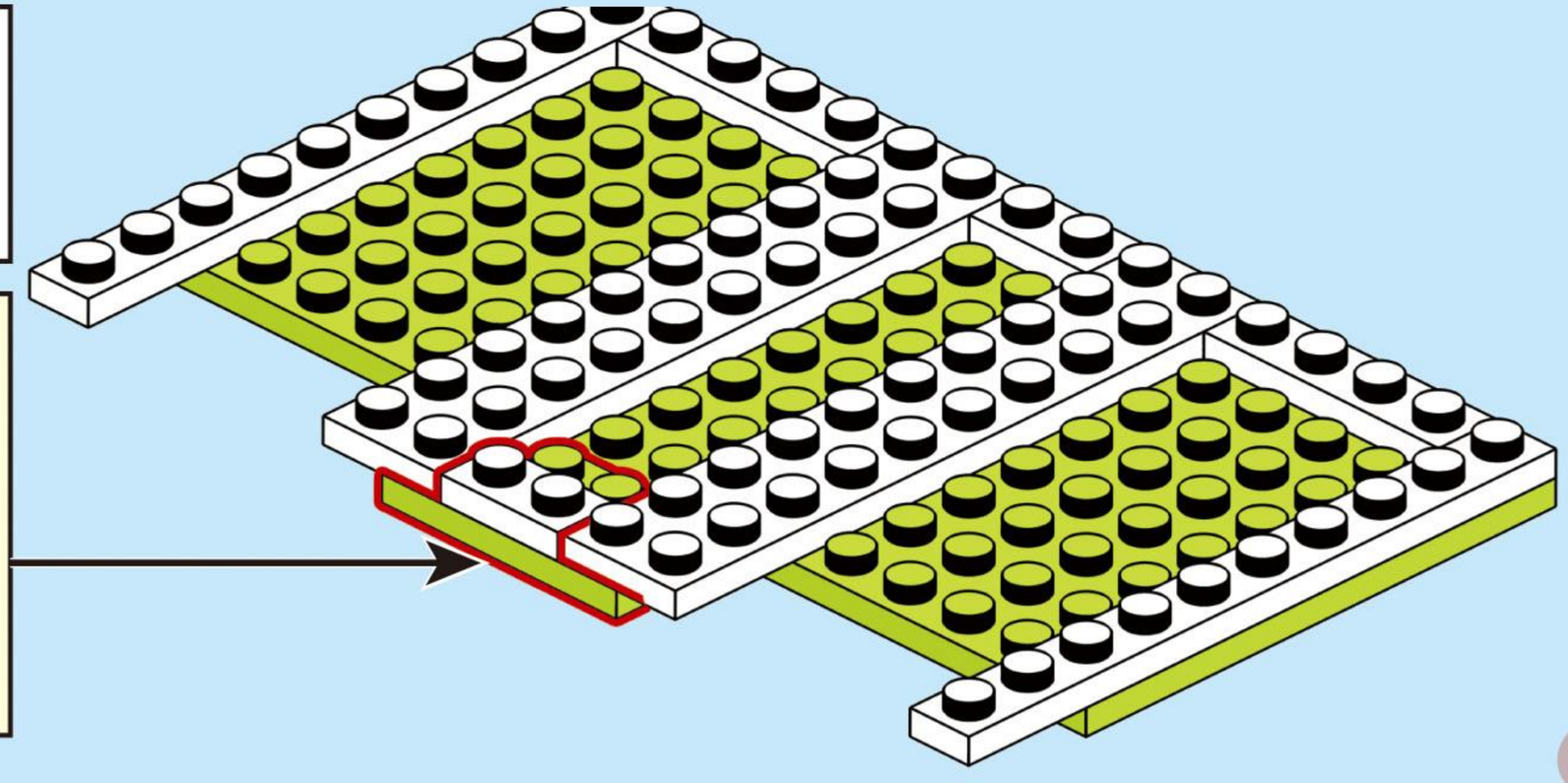

5

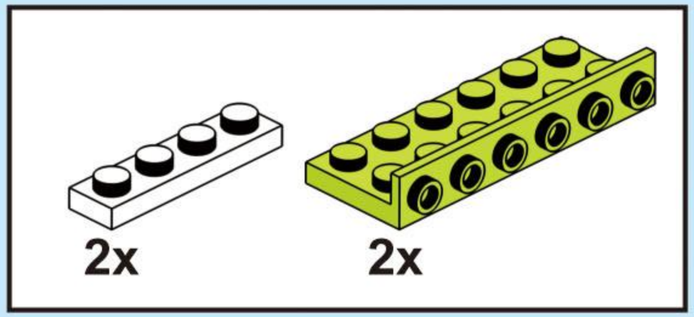

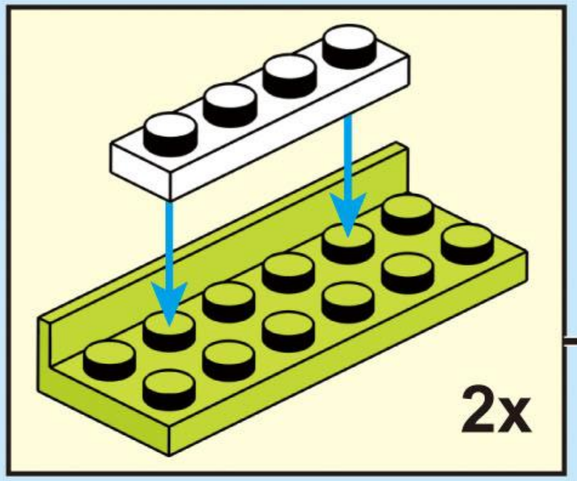

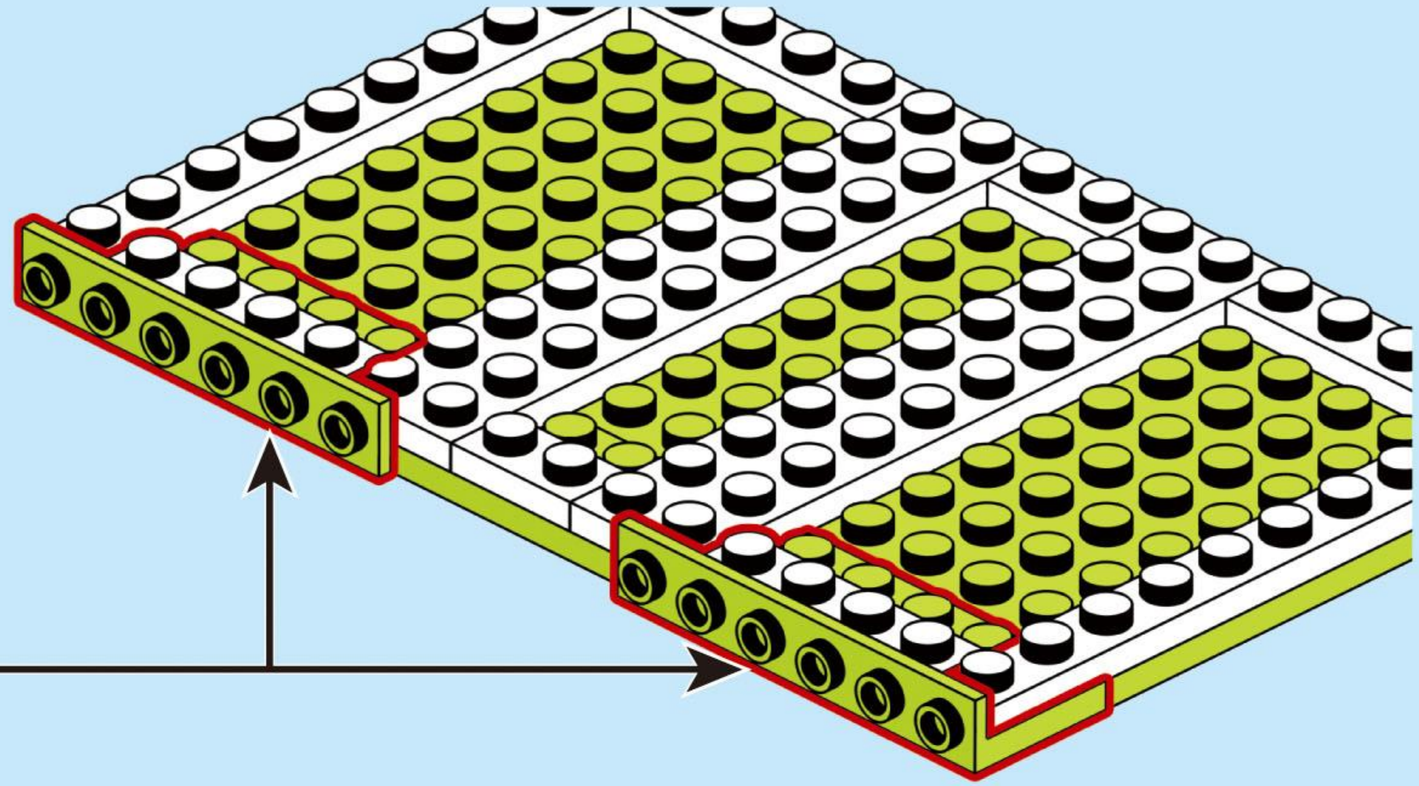

6

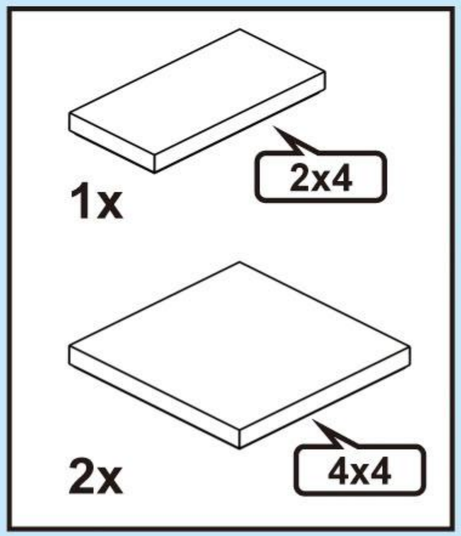

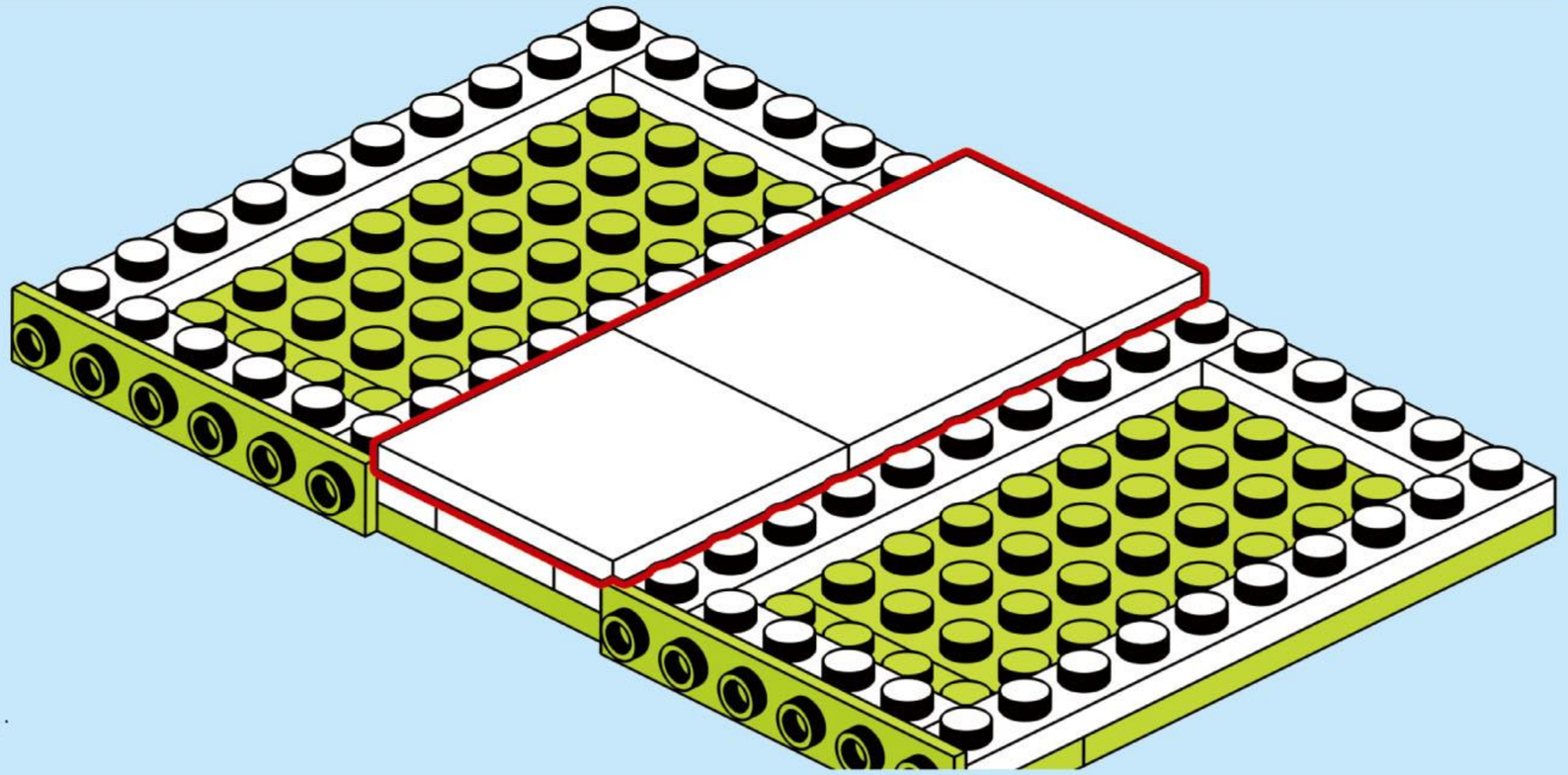



7

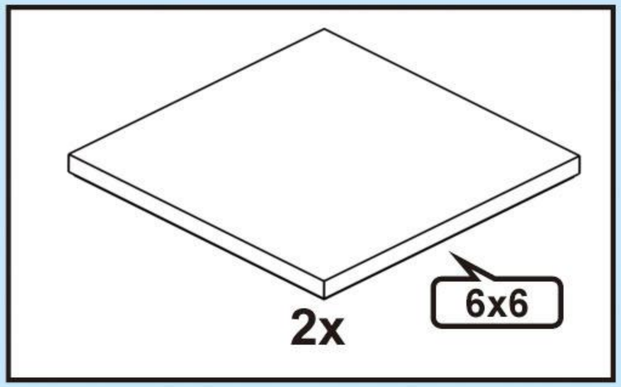

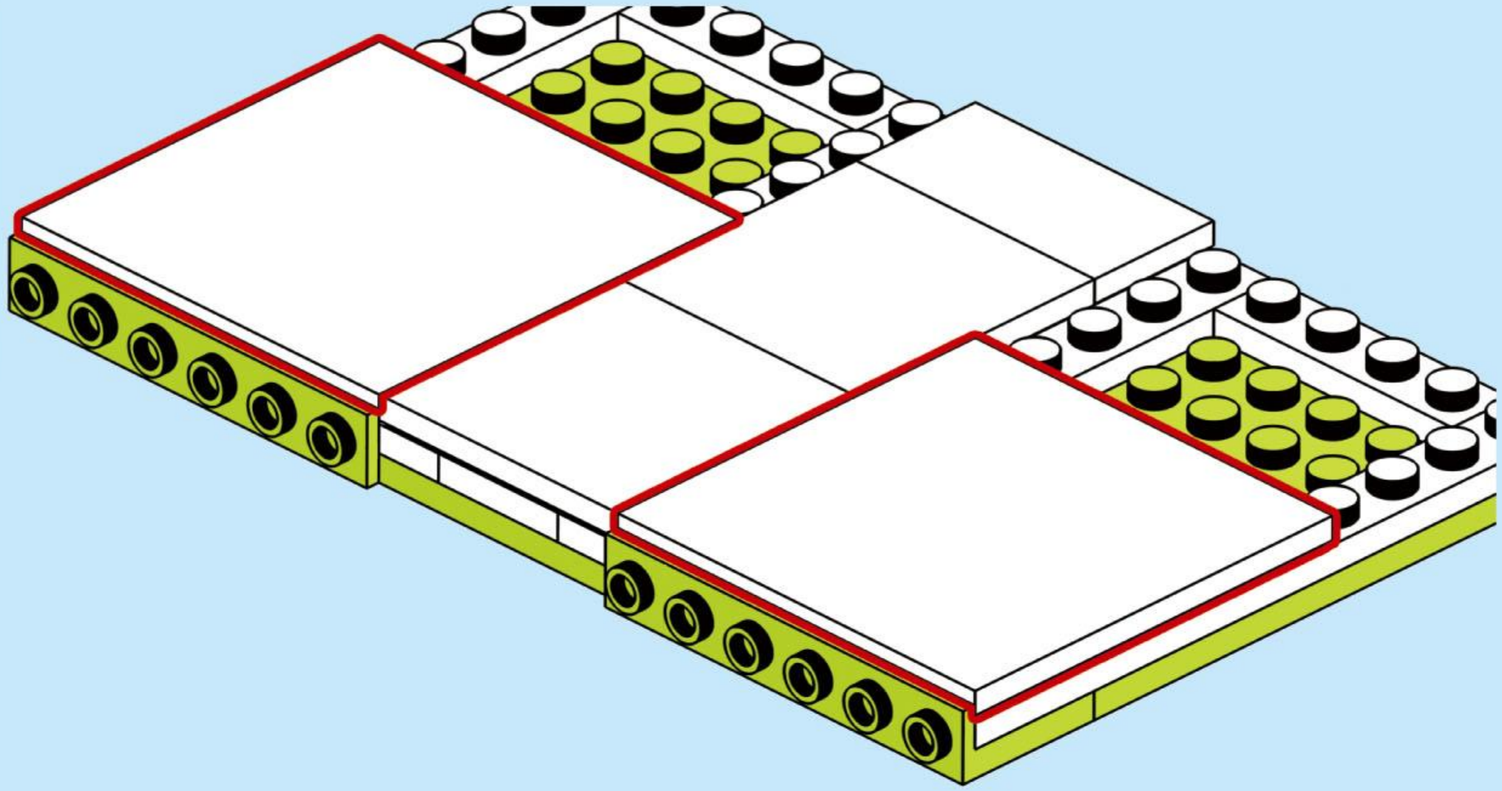

8

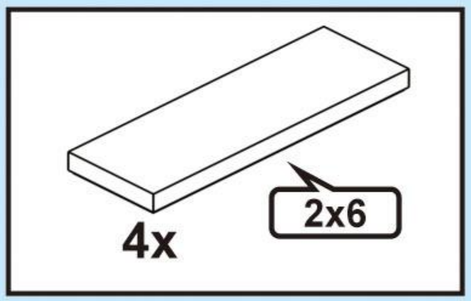

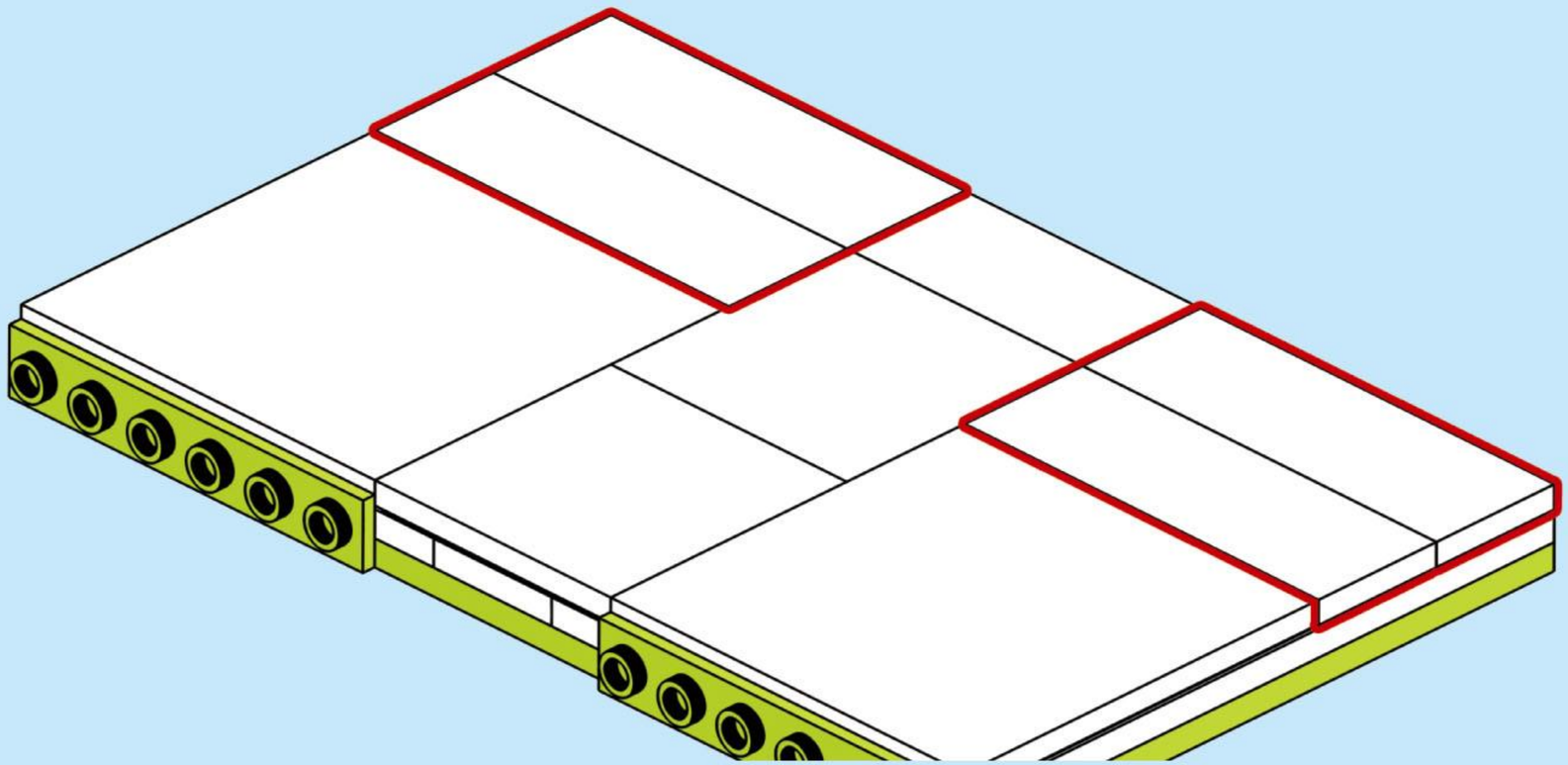

9

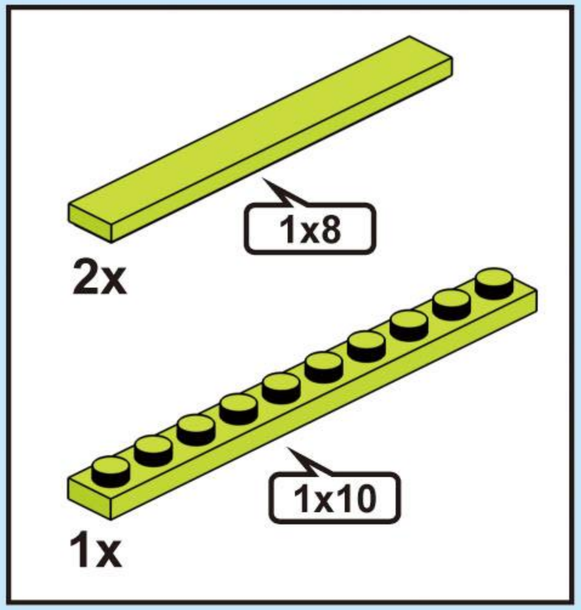

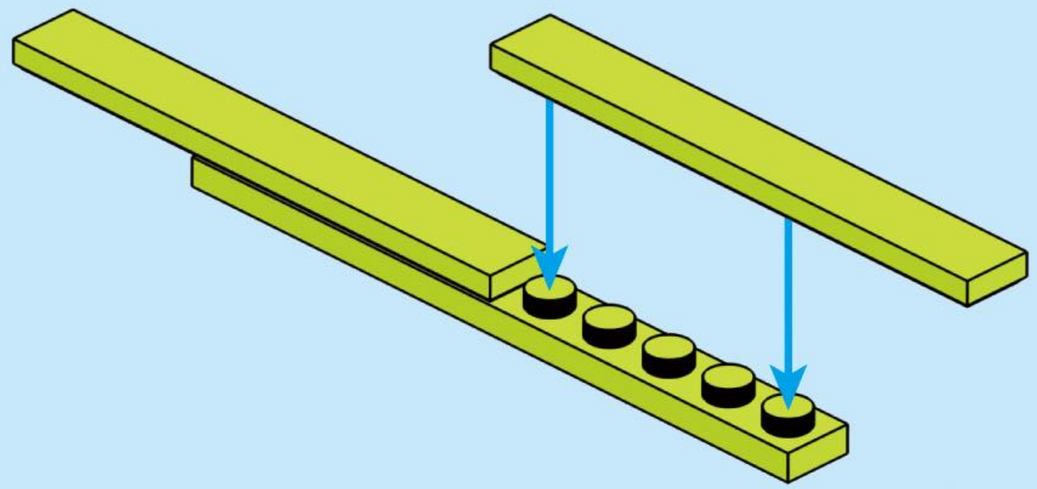

10

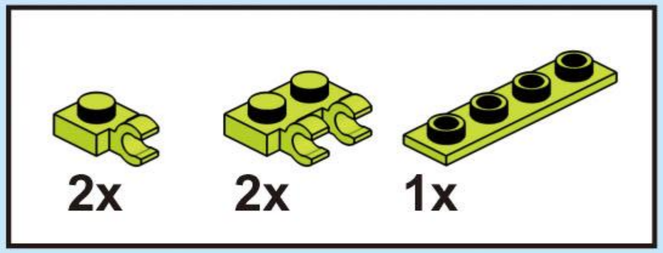



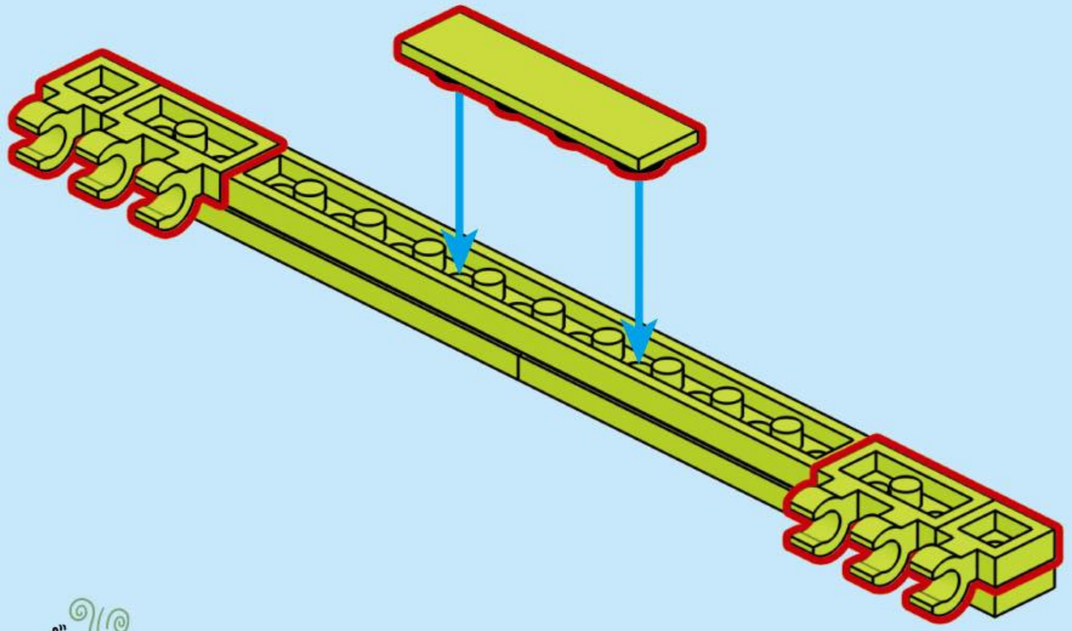



11

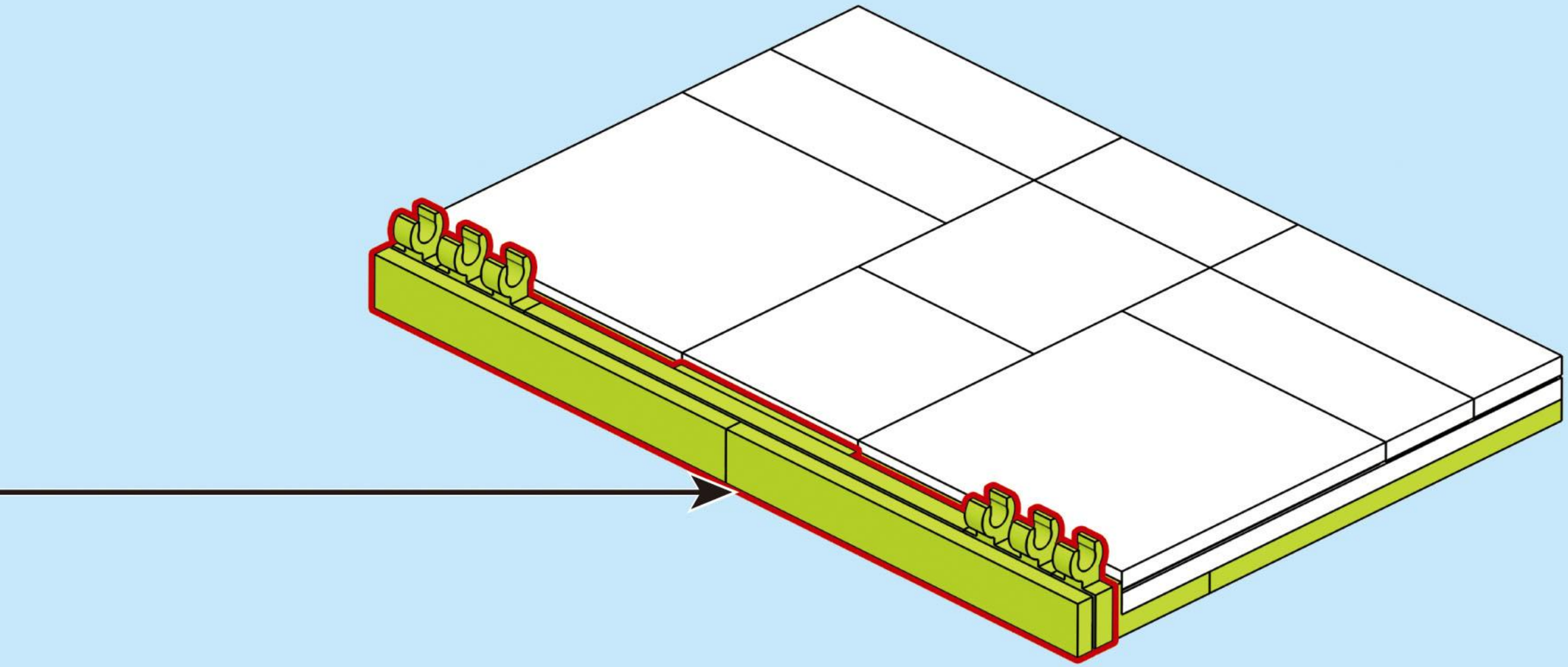

12

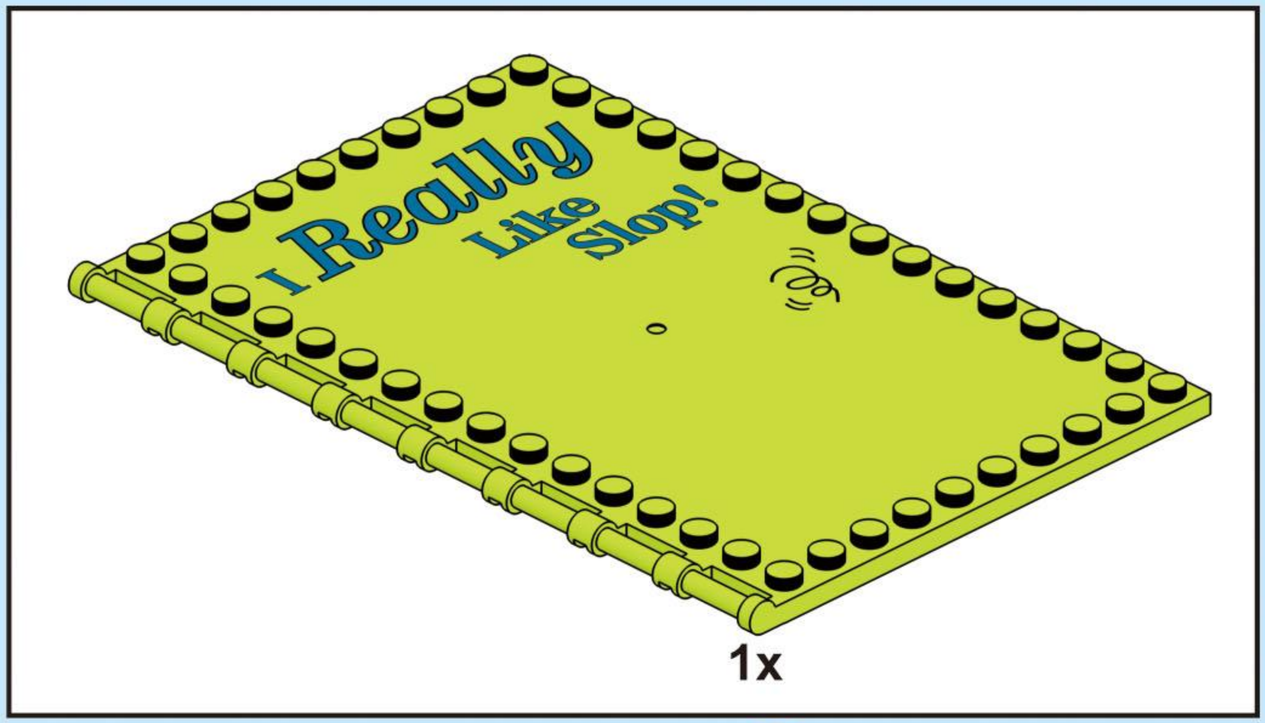

1x

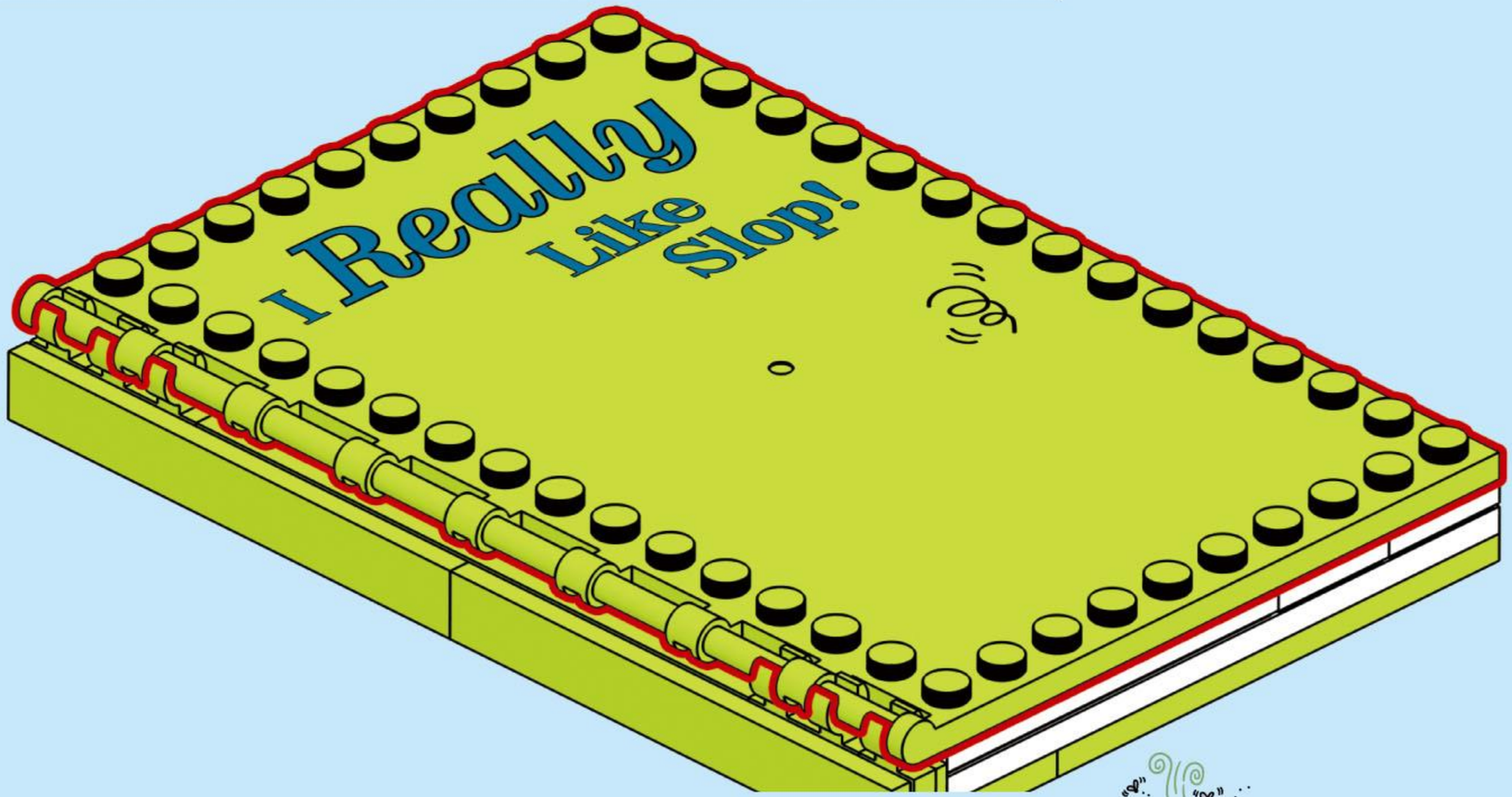

13

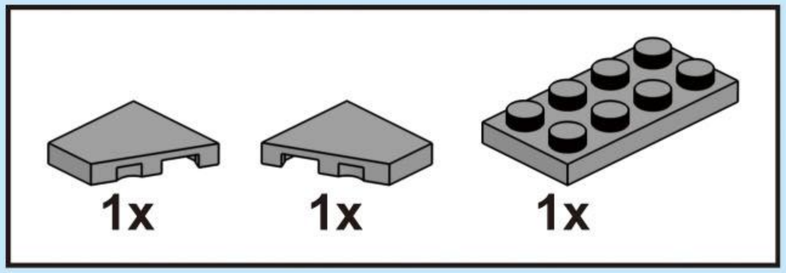

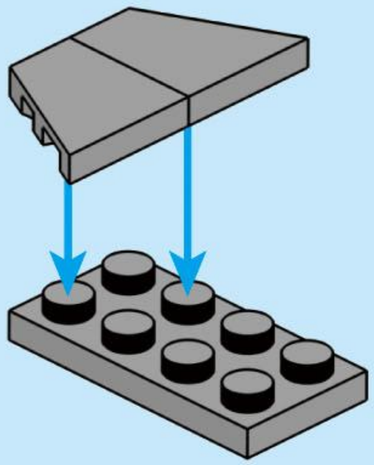

14

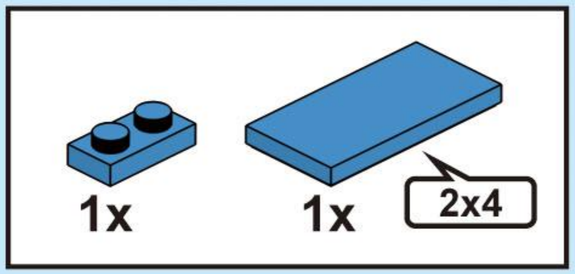

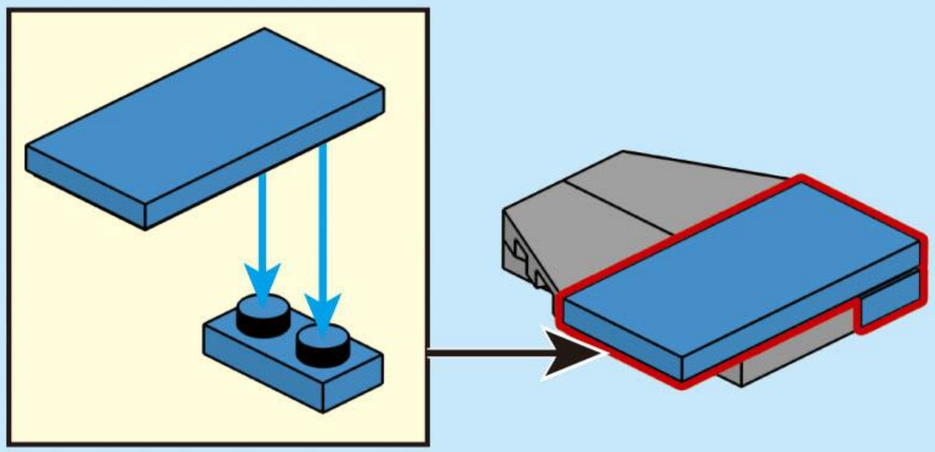

15

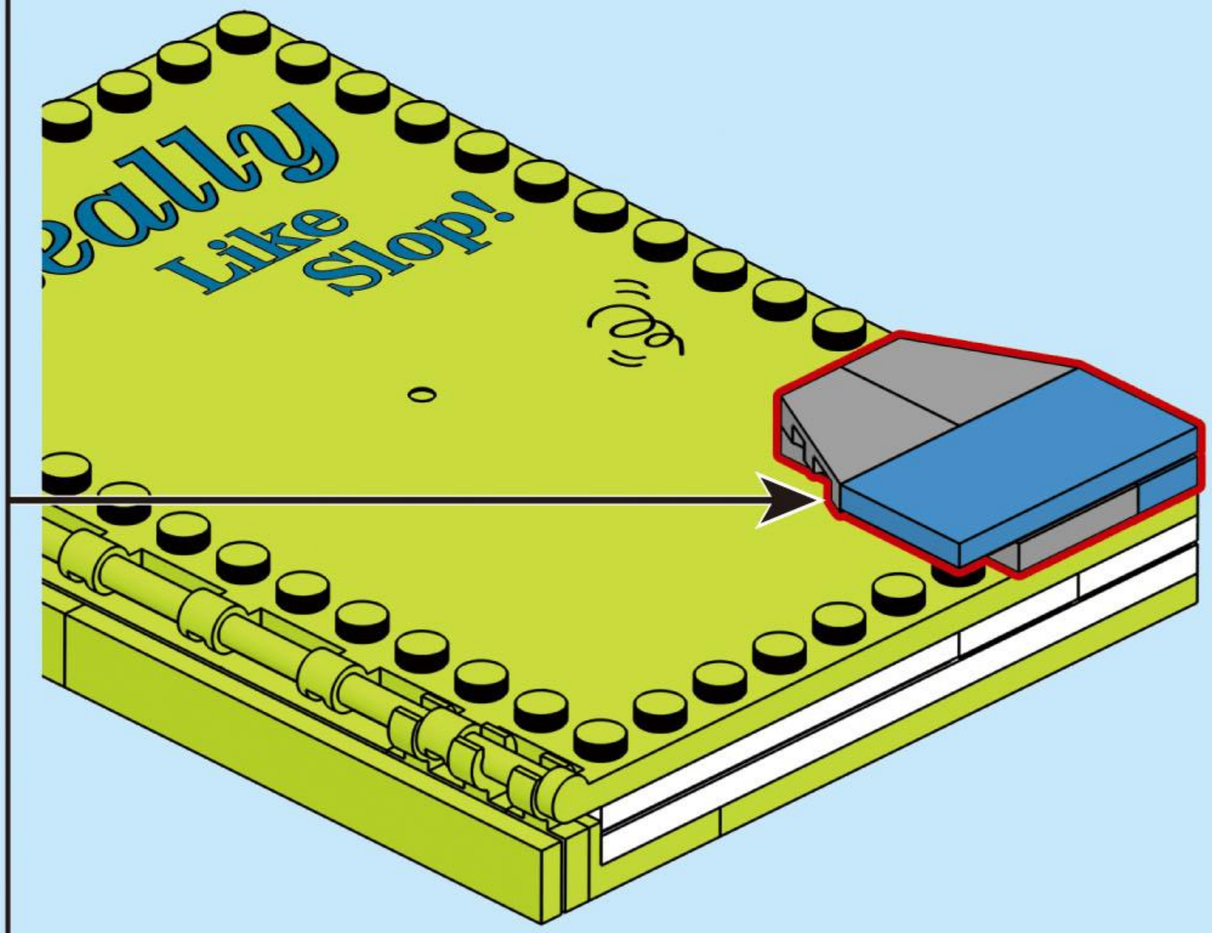

16

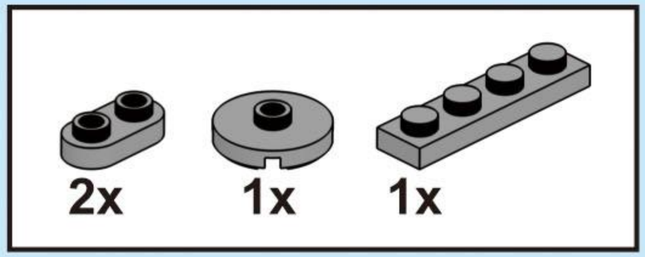

1

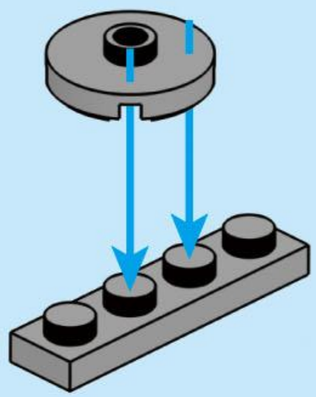

2

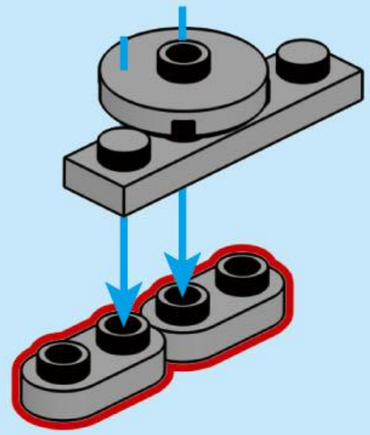

17

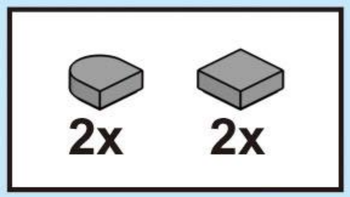

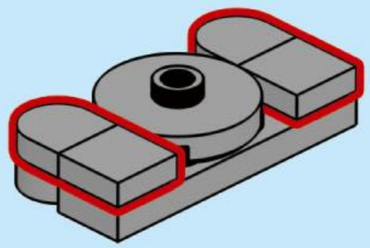

18

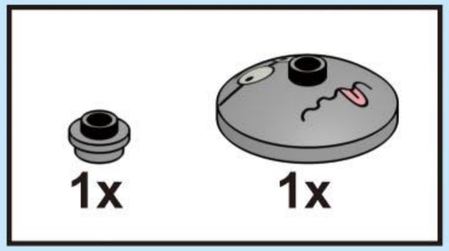

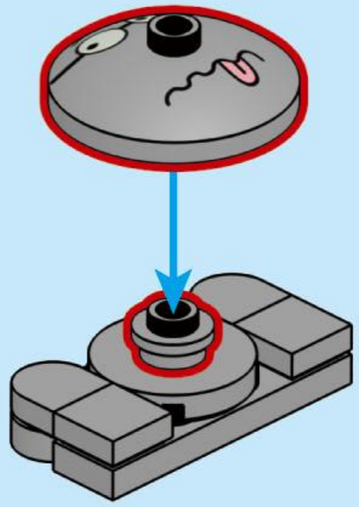

19

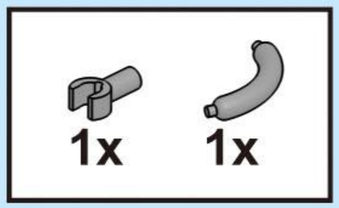

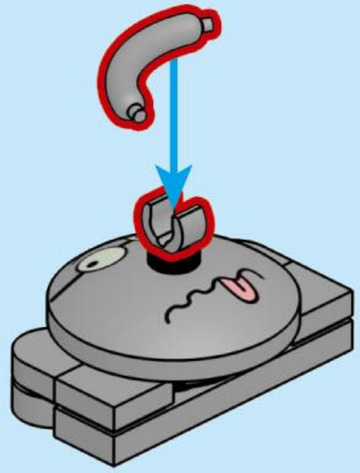



20

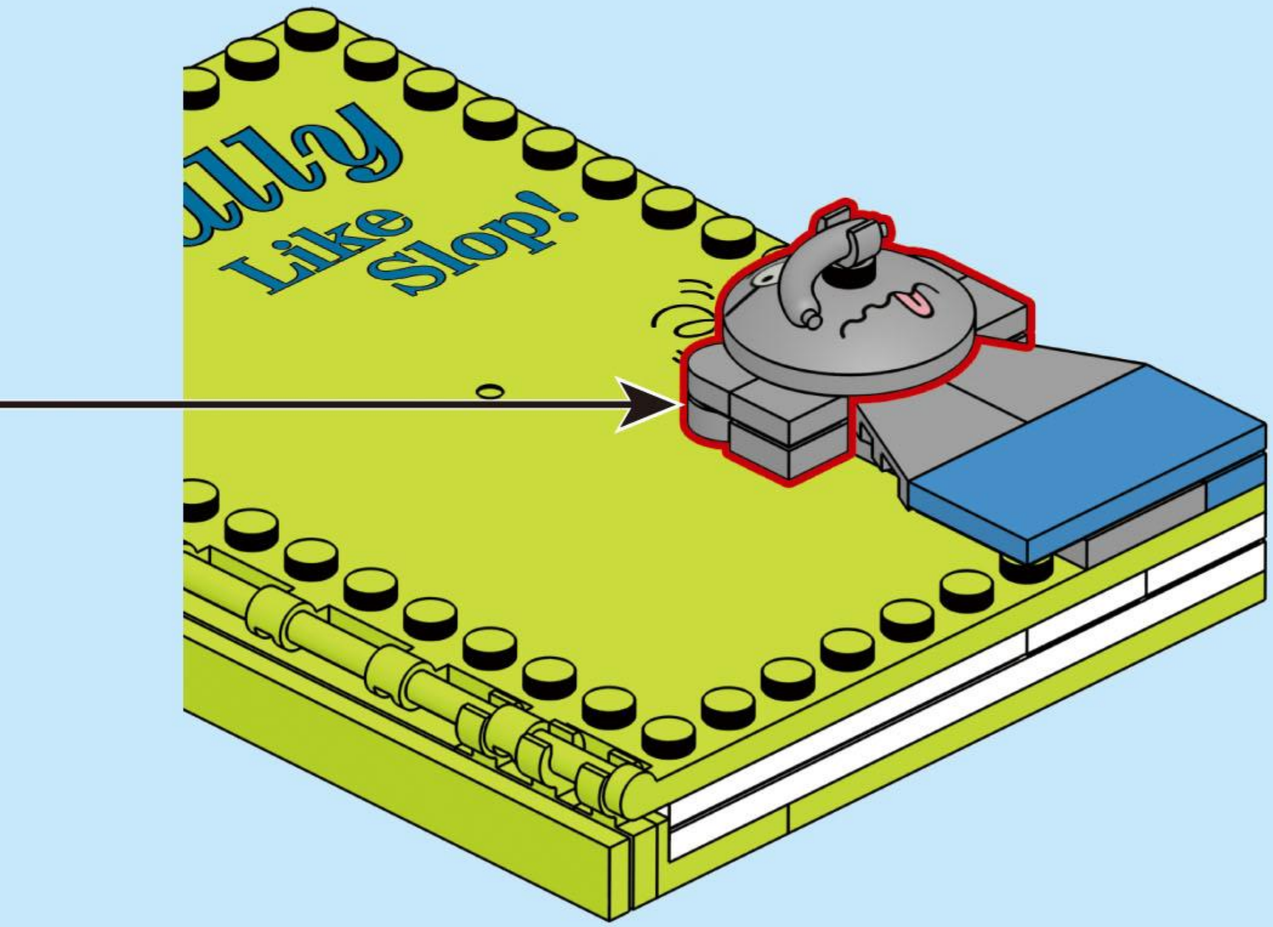

21

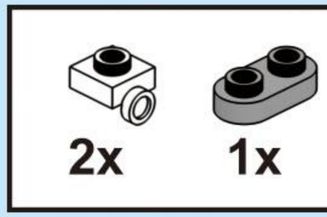

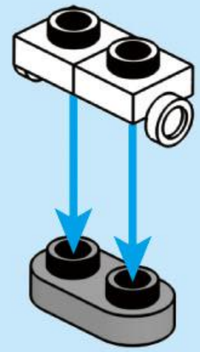

22

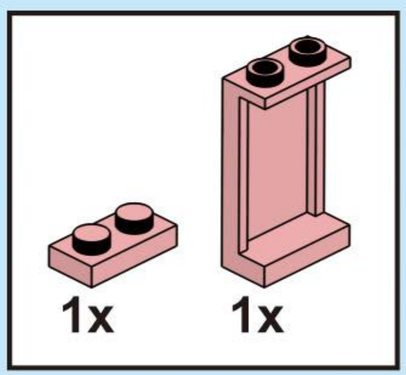

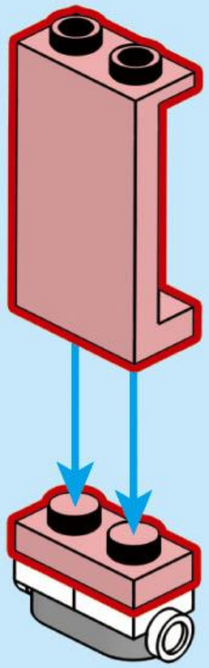

23

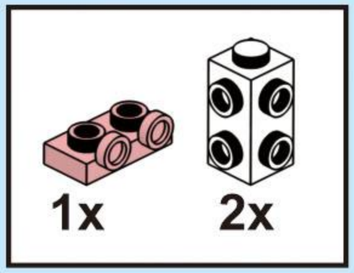

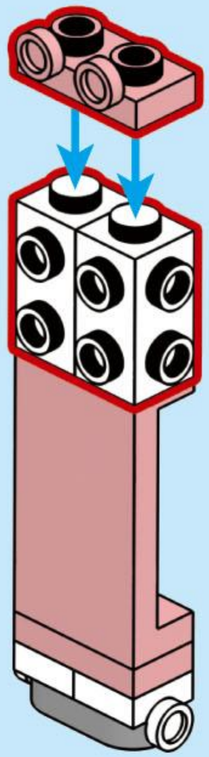

24

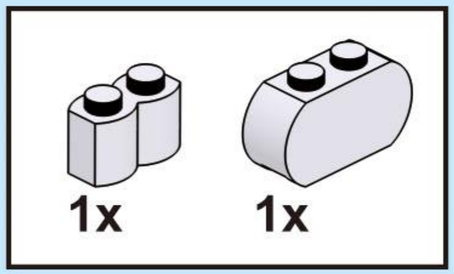

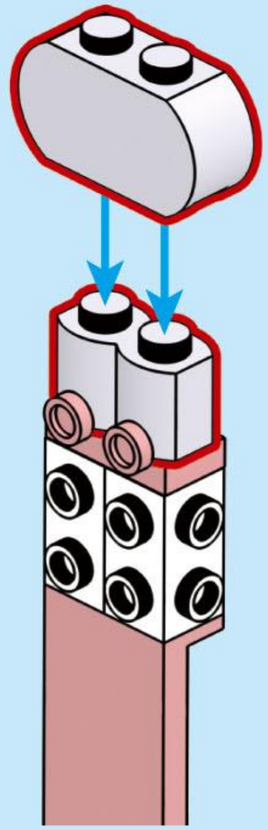

25

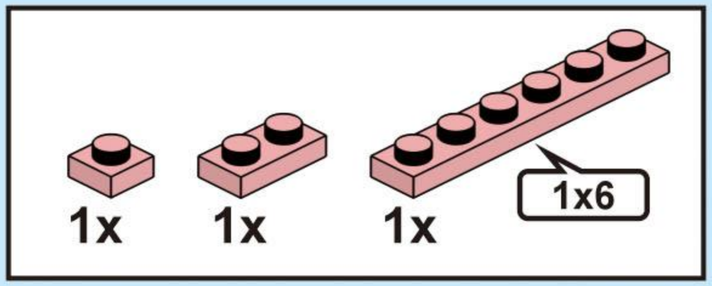

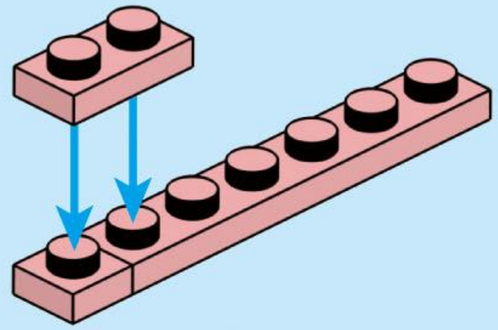

26

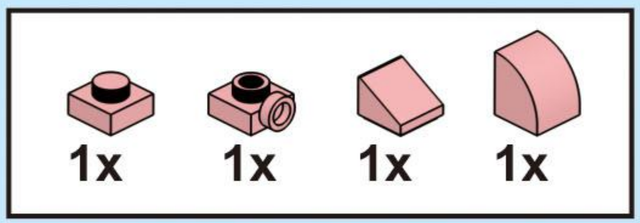

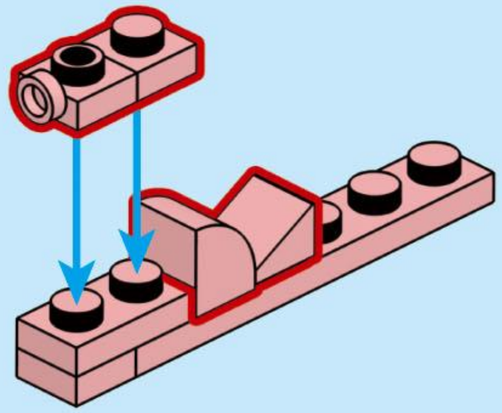

27

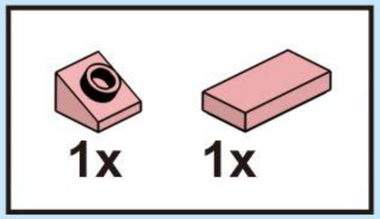

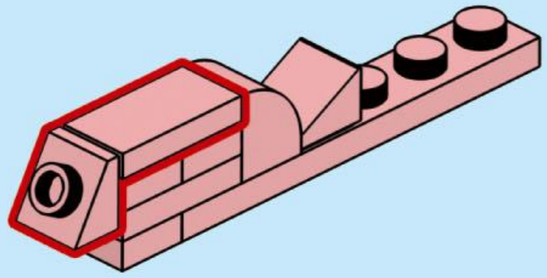

28

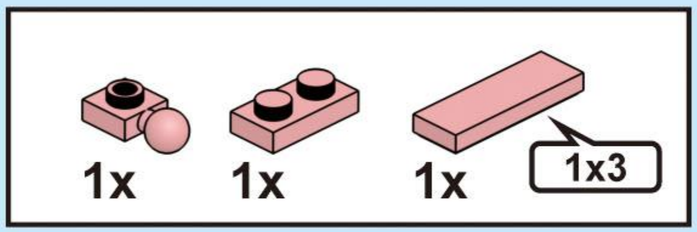

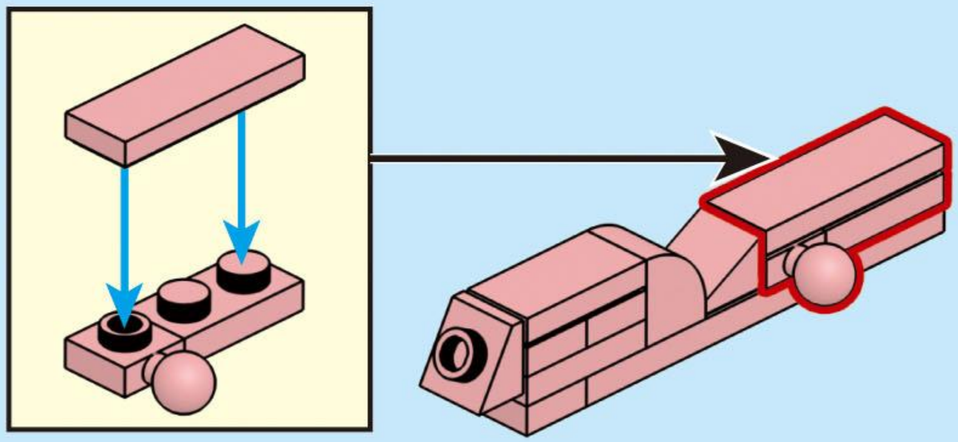

29

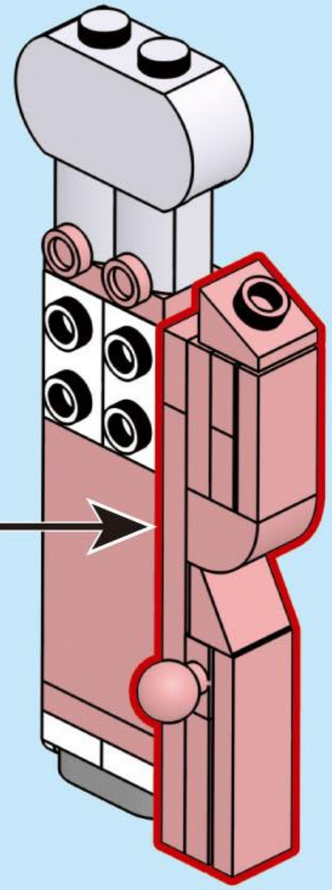

30

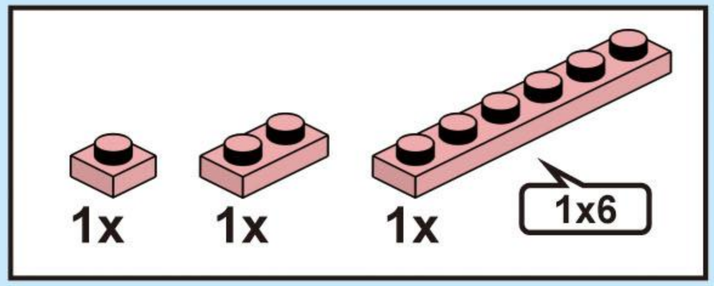

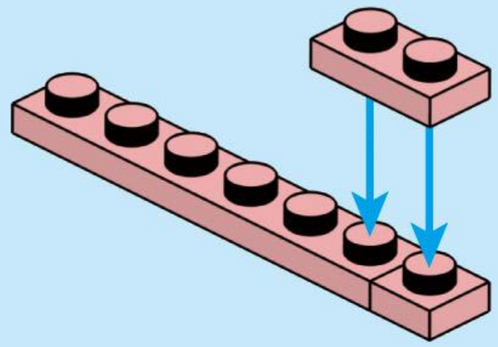

31

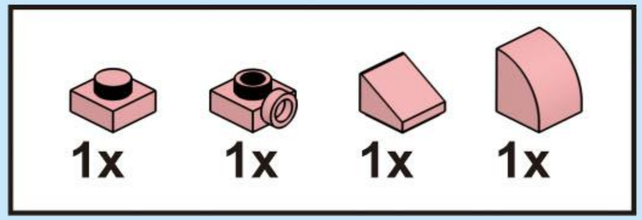

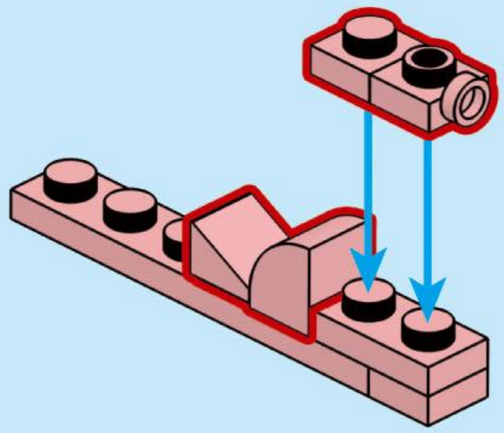

32

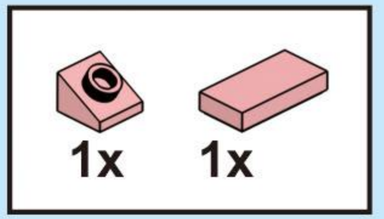

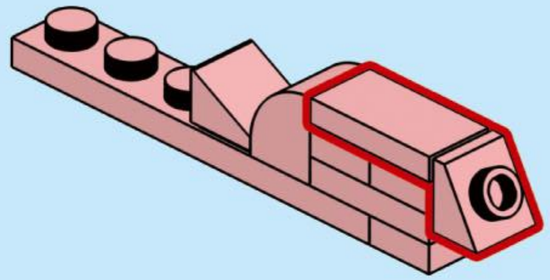

33

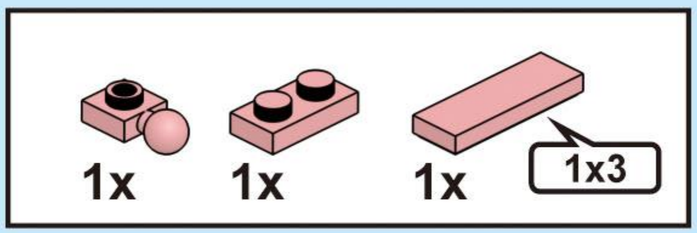

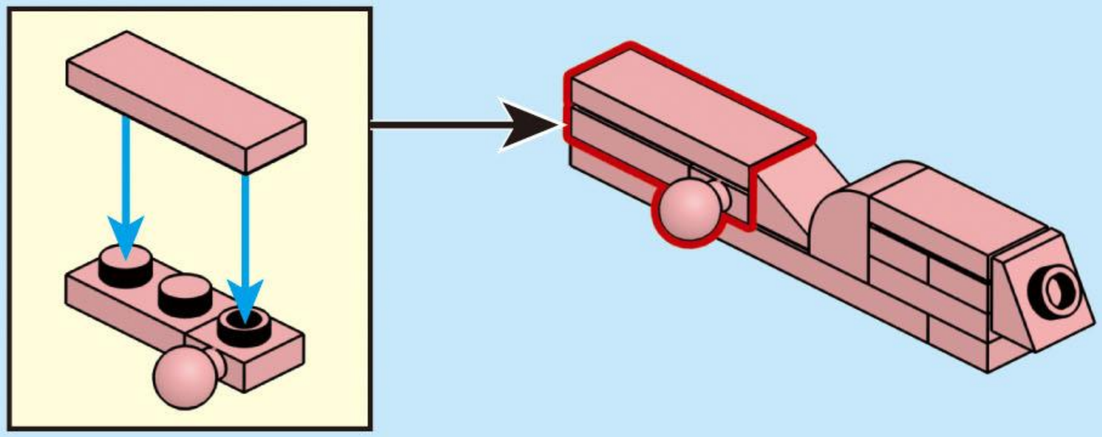

34

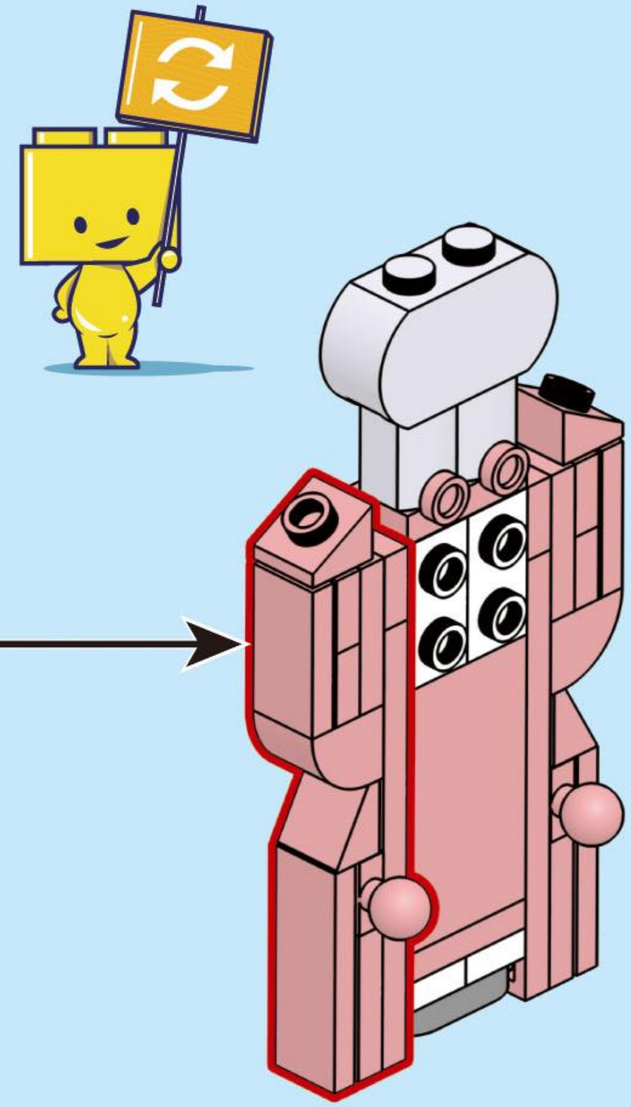

35

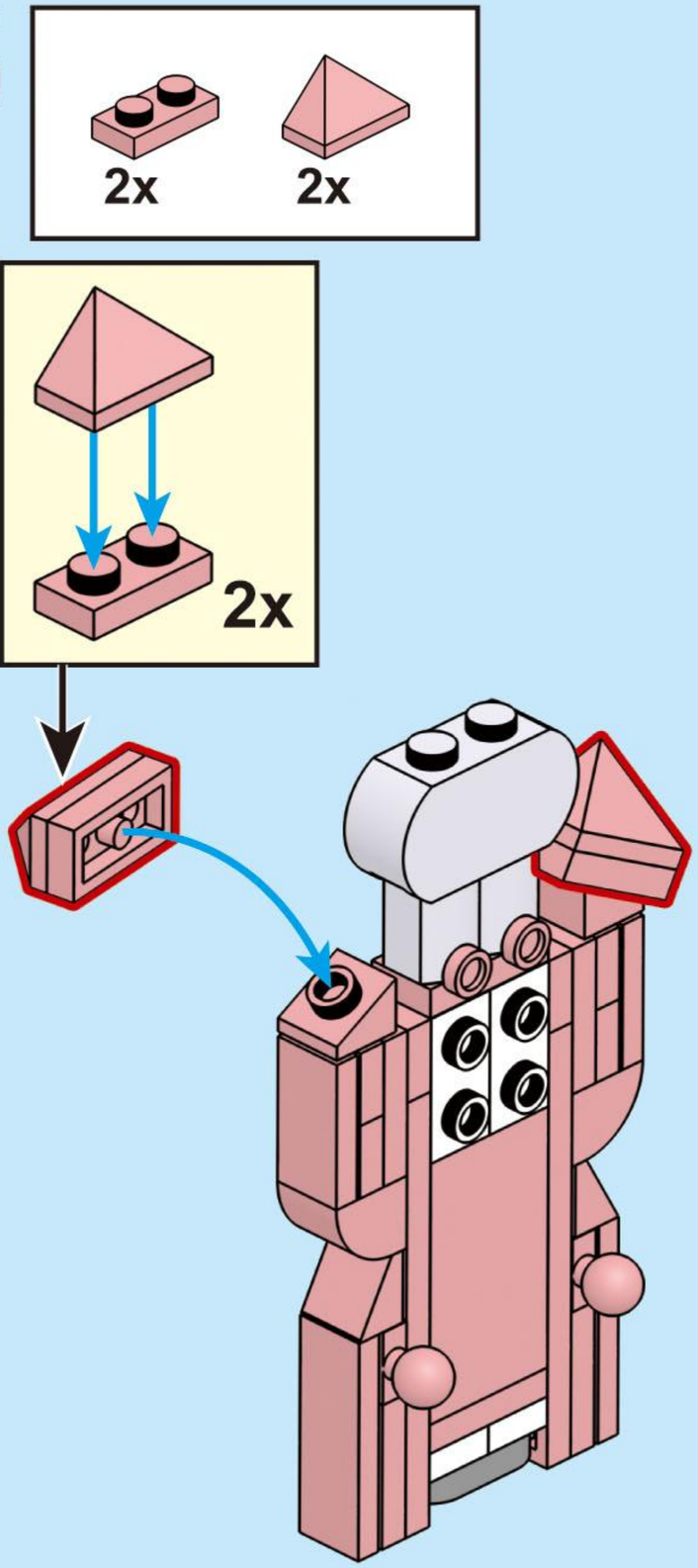



36



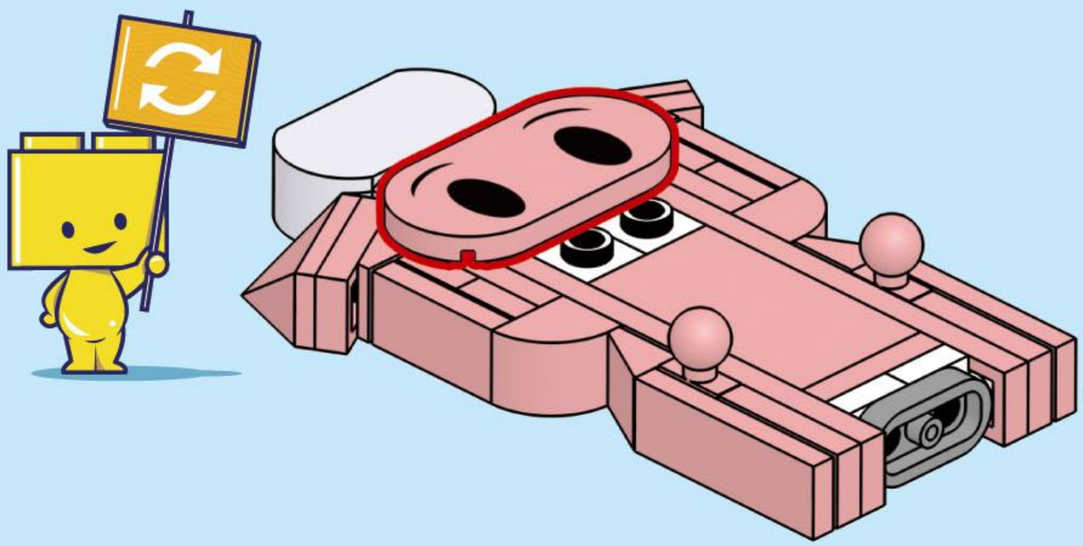

37

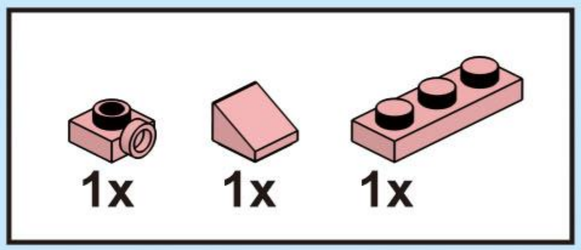

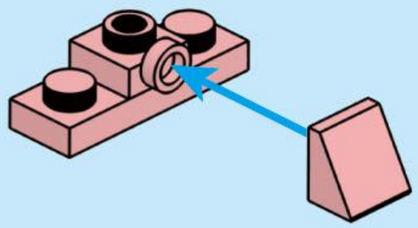

38

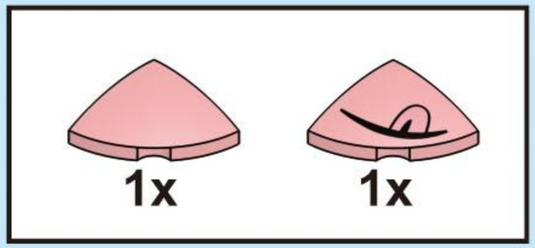

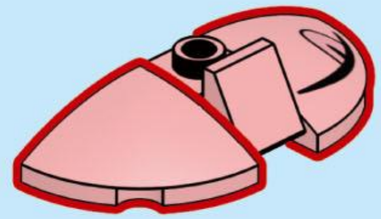

39

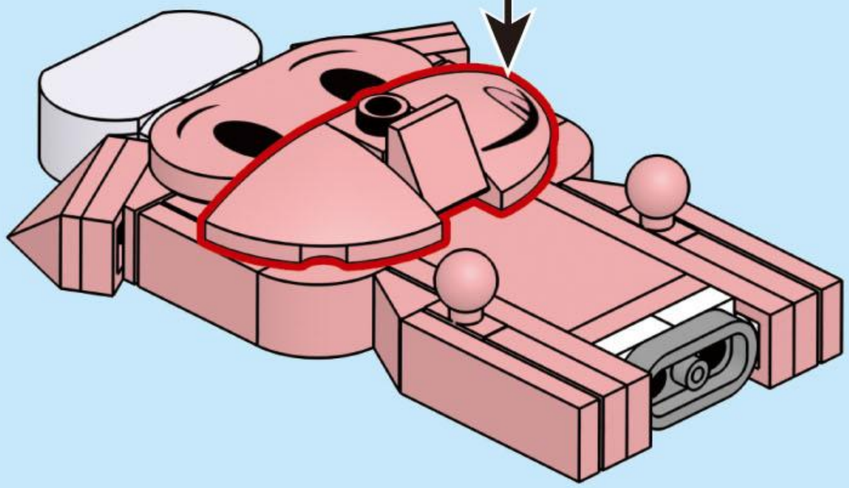

40

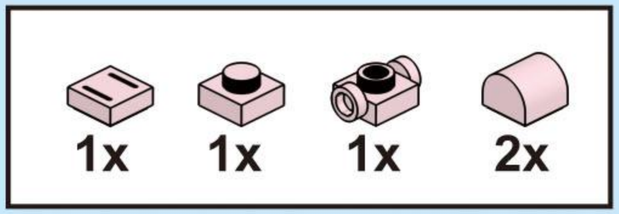

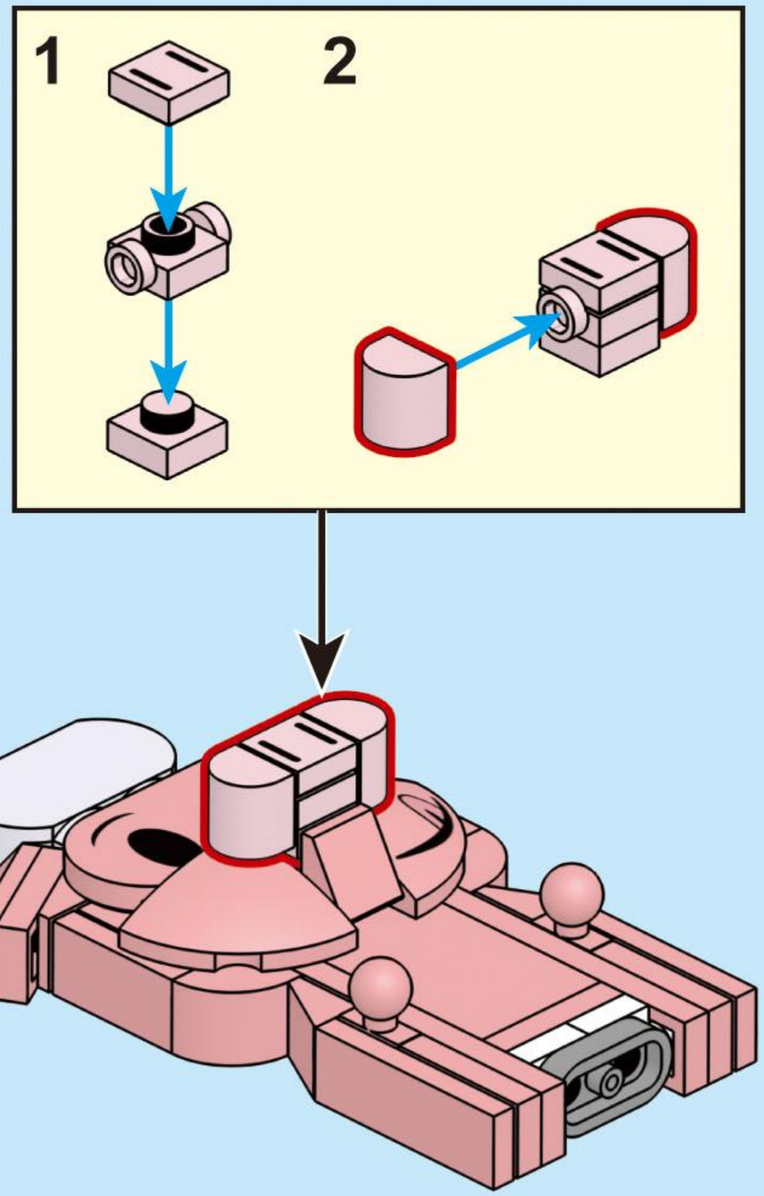

41

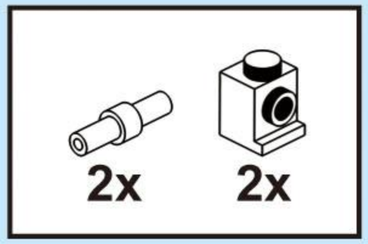

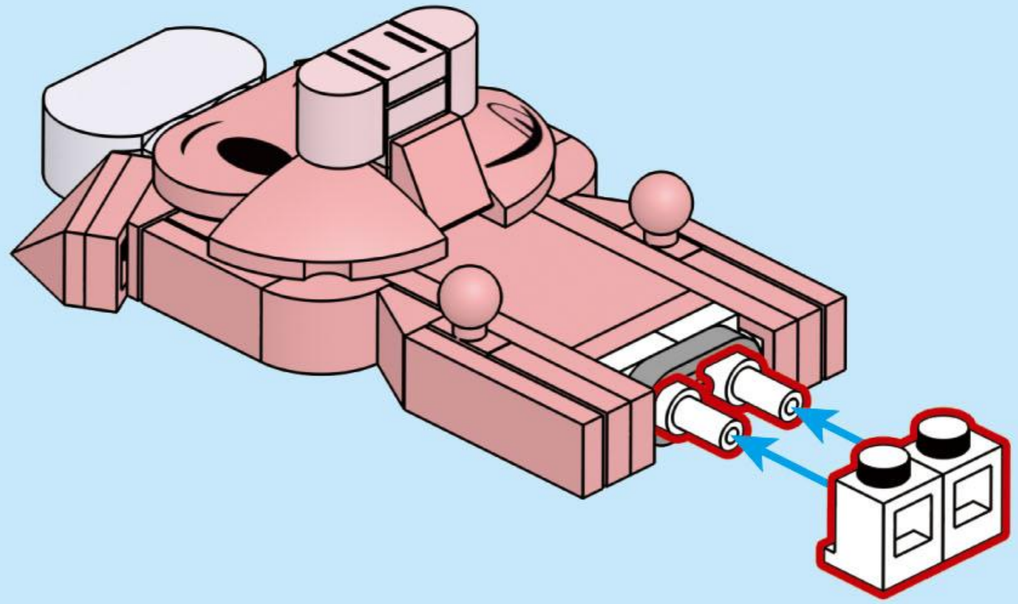

42

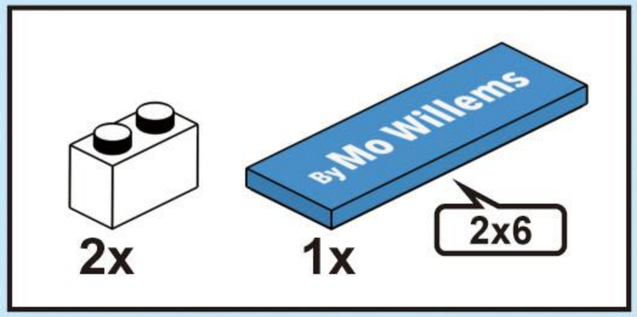

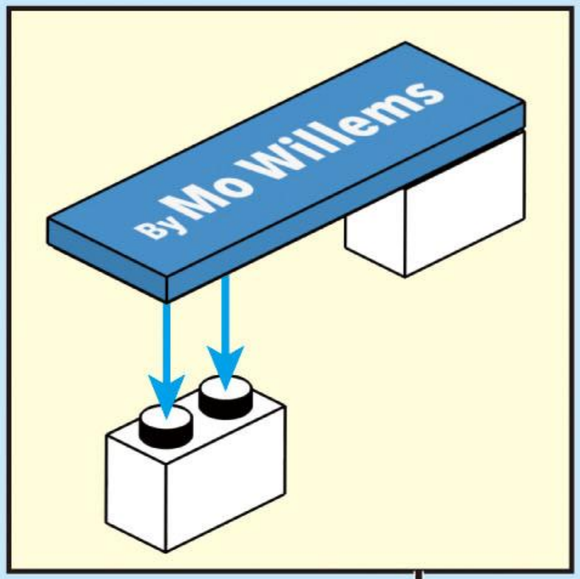

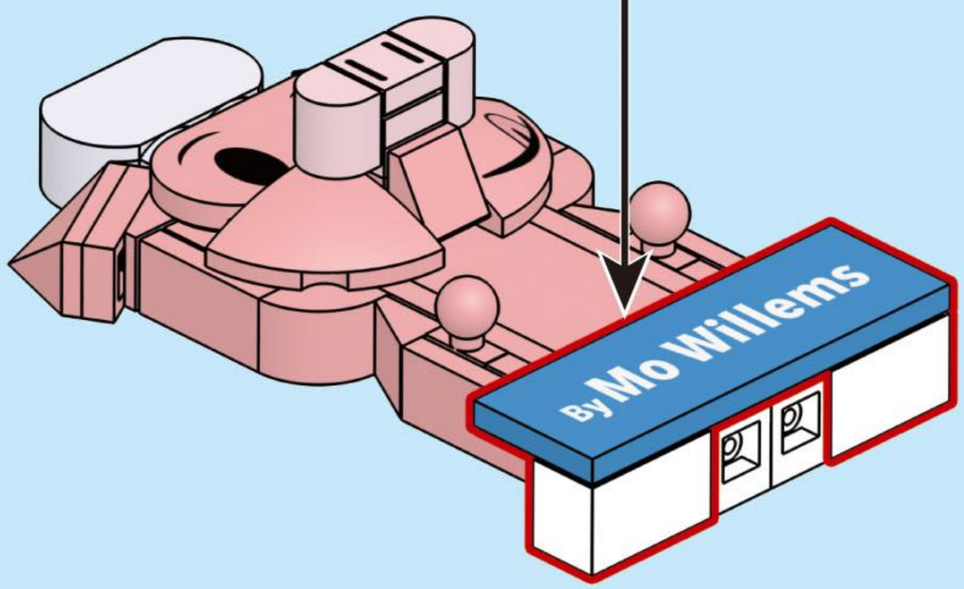

43

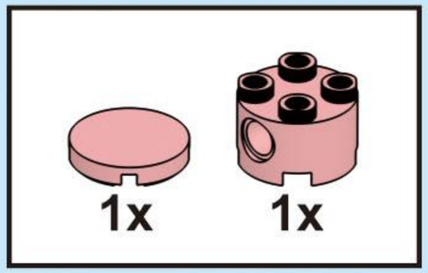

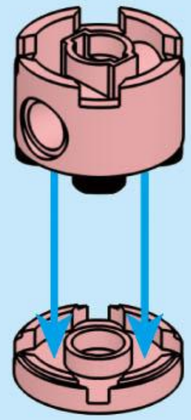

44

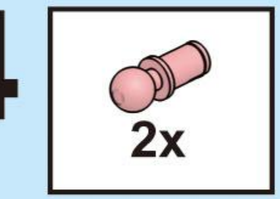

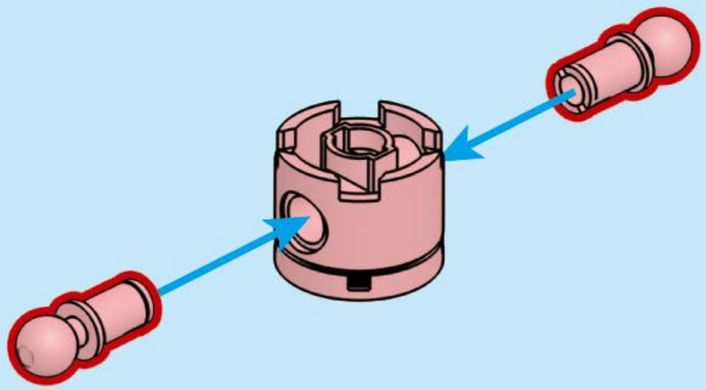

45

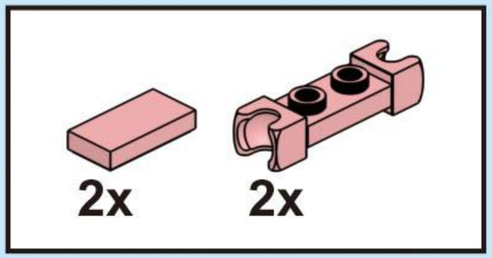

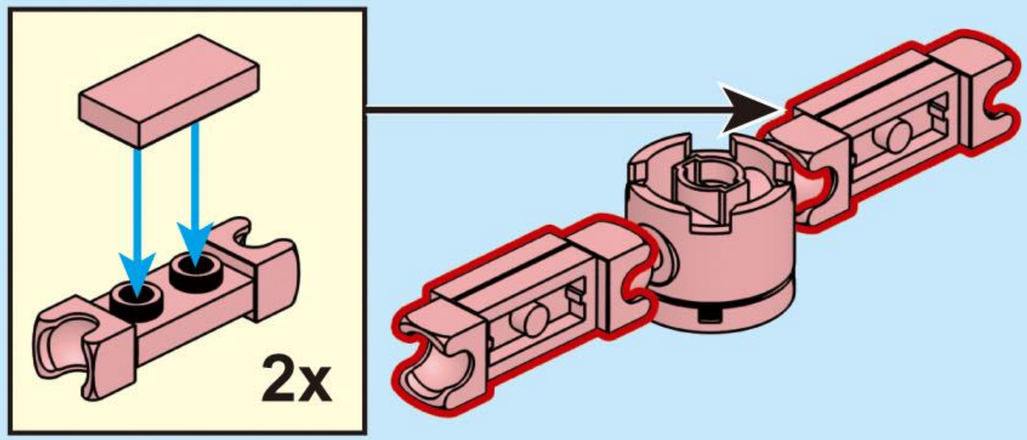

46

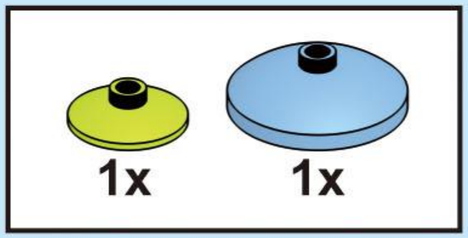

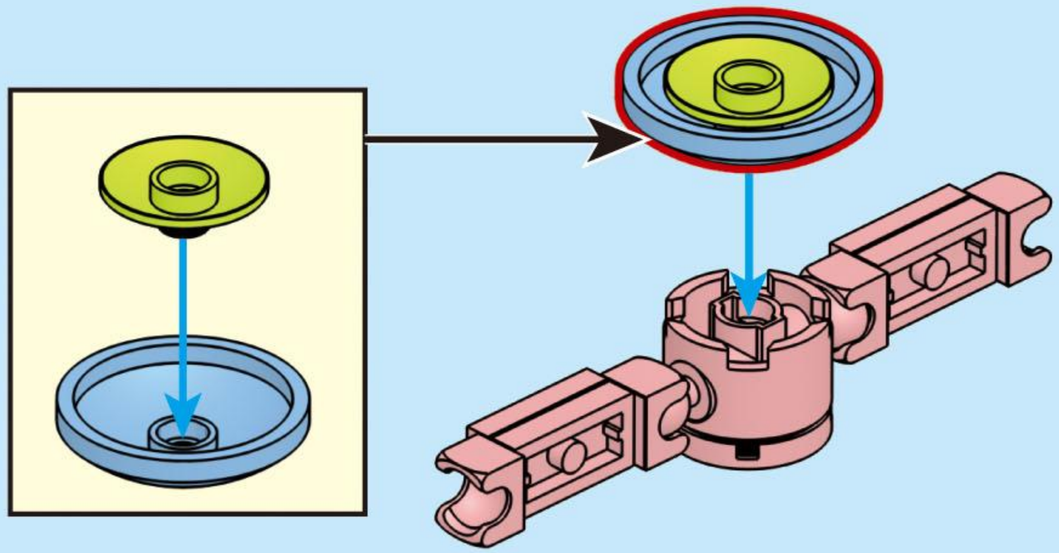

47

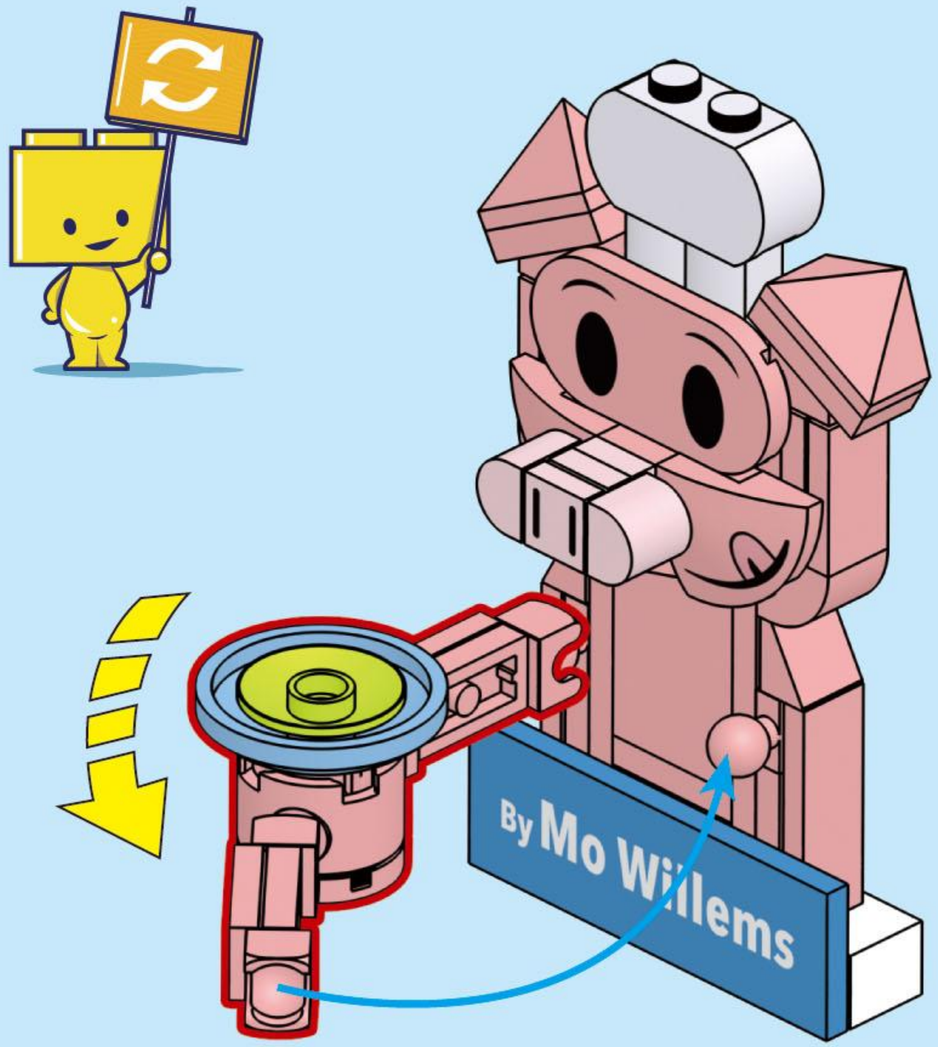

48

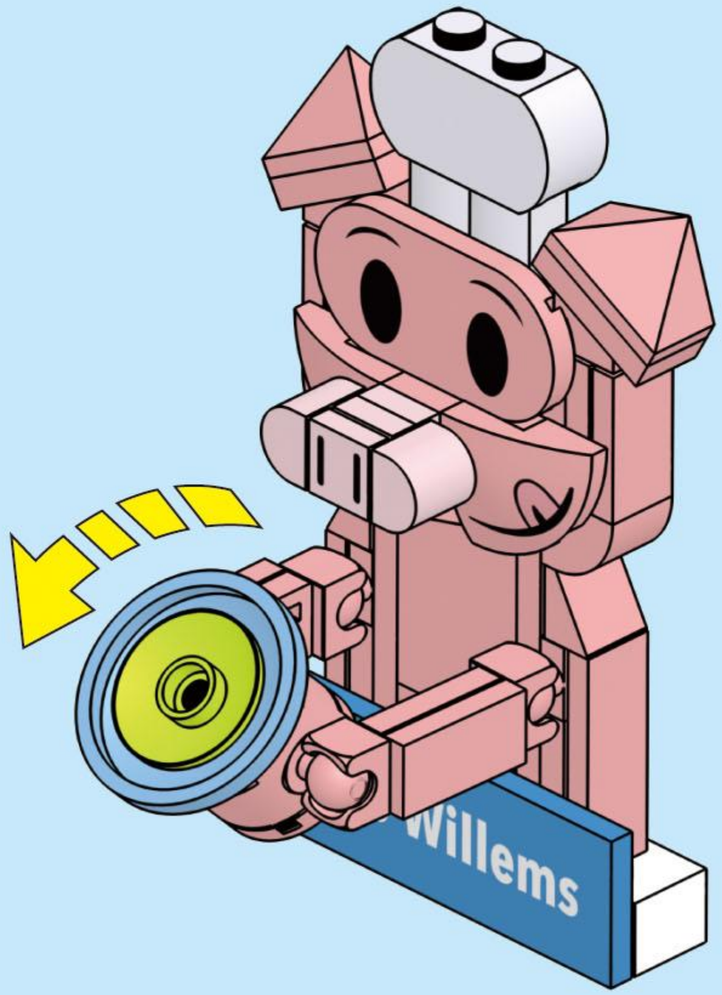

49

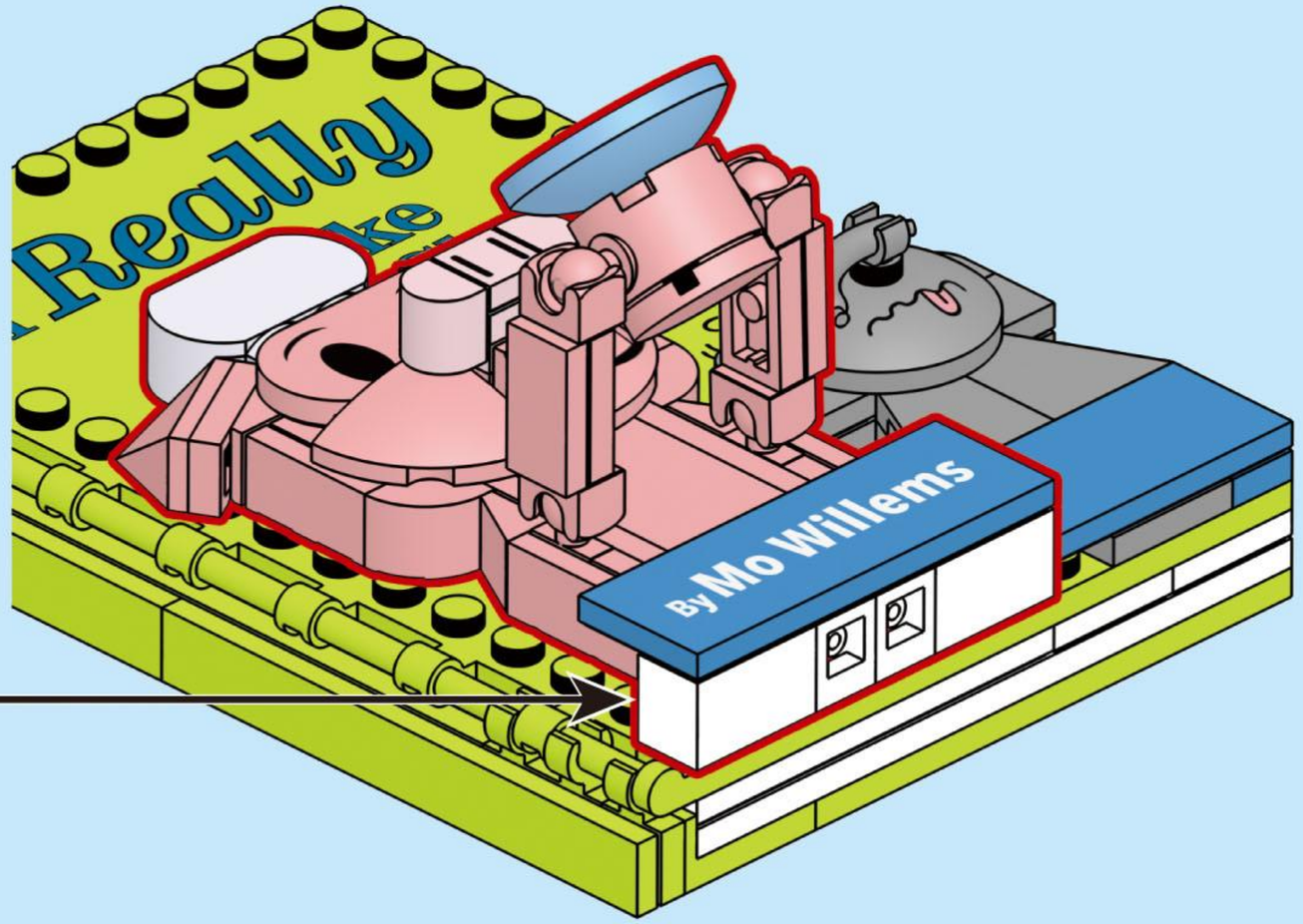

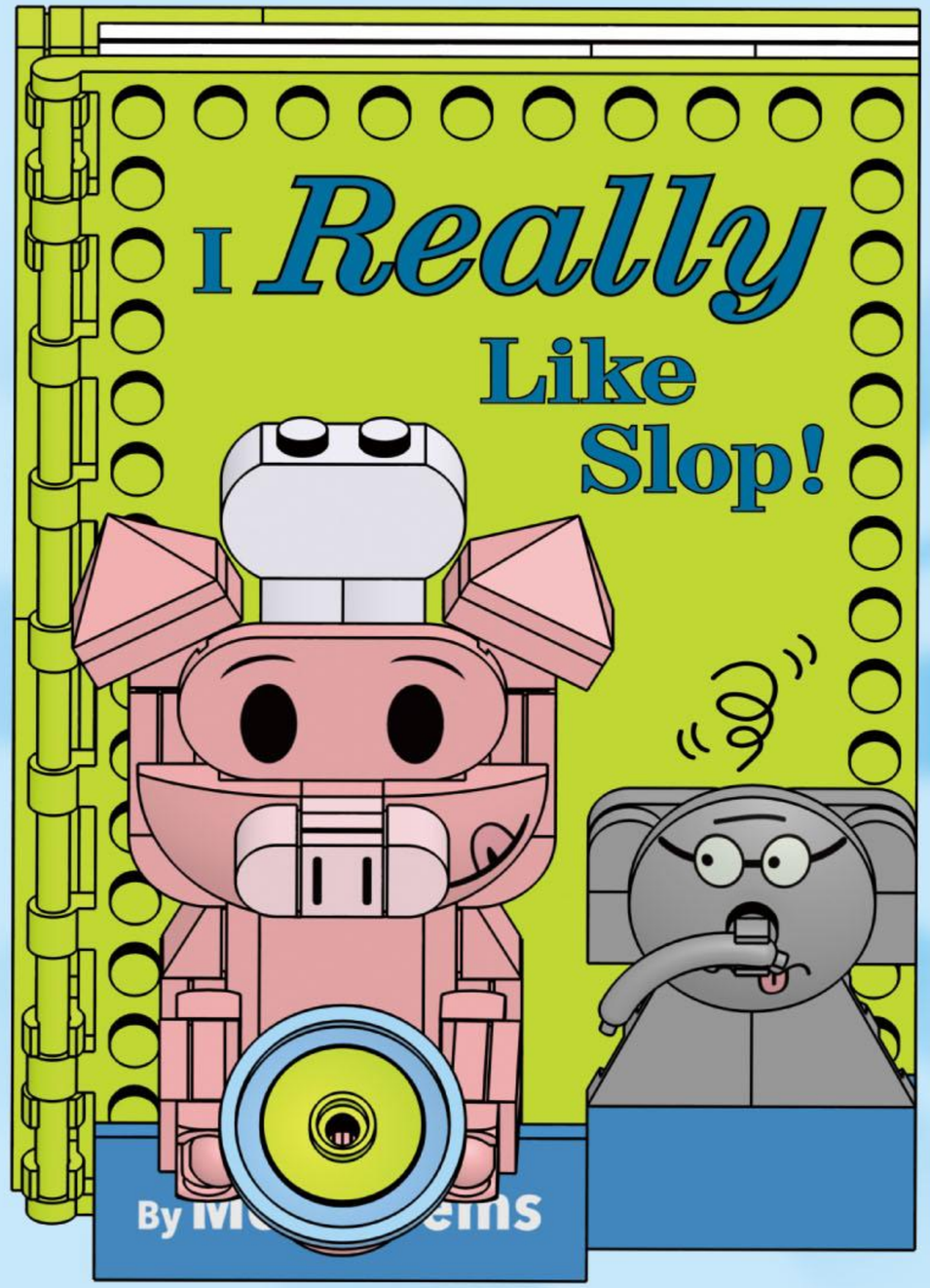
I Really
Like
Slop!
By Mo



4x
A102-00-DG1020



3x
A932-00-DG1020



3x
A019-00-DG1020



2x
A964-00-DG1020



2x
A974-00-DG1020

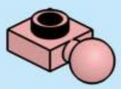

2x
GDS-90194-DG1020



2x
X135-00-DG1020



1x
A584-00-DG1020

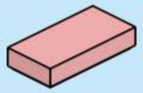

4x
A101-02-DG1020

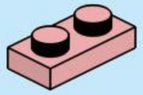

7x
A116-00-DG1020

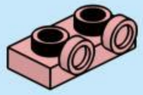

1x
GDS-90193-DG1020

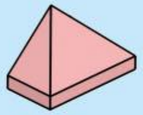

2x
A344-00-DG1020



1x
A036-00-DG1020



1x
A1019-00-DG1020



1x
A1019-72803-DG1020

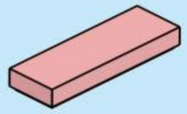

2x
A113-00-DG1020

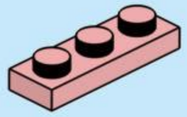

1x
A052-00-DG1020

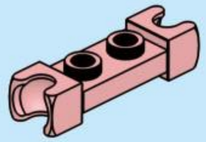

2x
GDS-90267-DG1020



1x
G90043-72803-DG1020

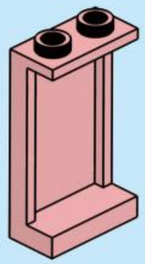

1x
A403-00-DG1020

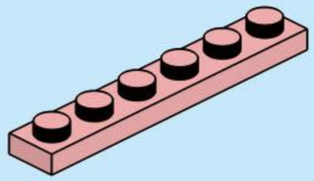

2x
A054-00-DG1020



1x
A606-00-194



1x
A986-00-194



2x
A654-00-194

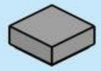

2x
A103-00-194



1x
R439-00-194



3x
A809-00-194



1x
A535-00-194



1x
A124-72803-194



1x
A959-00-194



1x
A958-00-194

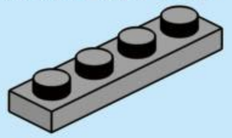

1x
A045-00-194

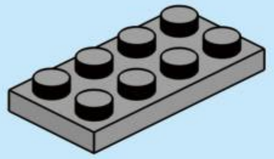

1x
A118-00-194



2x
GDS-90190-1

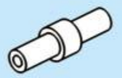

2x
GDS-90287-1



2x
A136-00-1

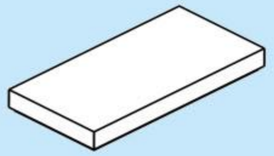

1x
A071-00-1

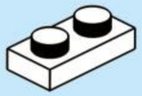

2x
A116-00-1

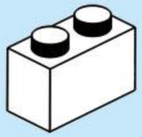

2x
A066-00-1



2x
GDS-90140-1

4x
A045-00-1

2x
GDS-90197-1

4x
A907-00-1

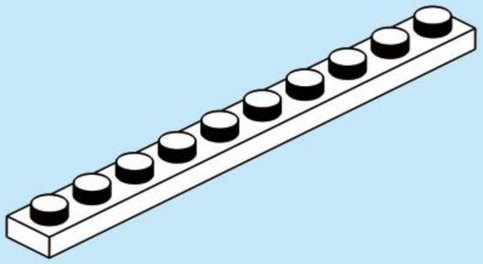

2x
A177-00-1

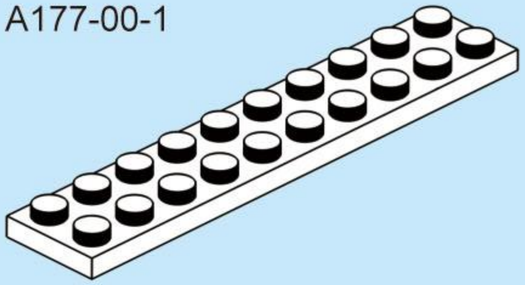

2x
A106-00-1

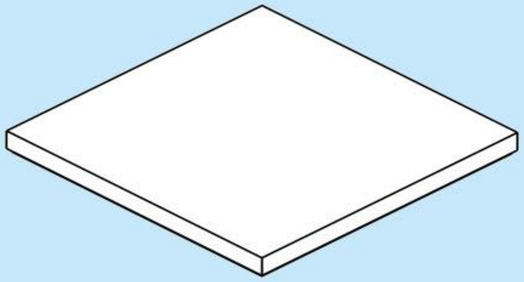

2x
A631-00-1



2x
A131-00-119



2x
A122-00-119



1x
A062-00-119

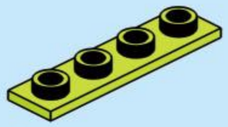

1x
A998-00-119

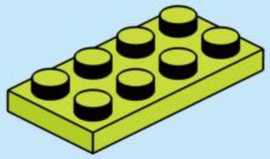

1x
A118-00-119

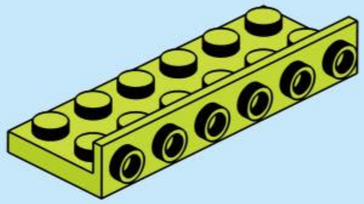

2x
A915-00-119

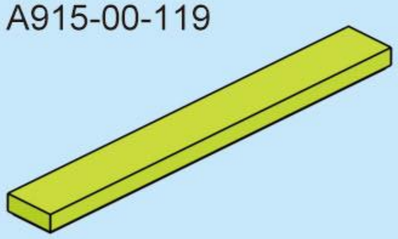

2x
A038-00-119



1x
A907-72803-102

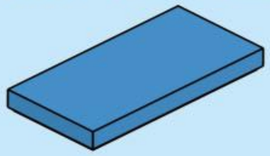

1x
A071-00-102

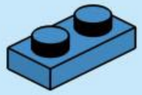

1x
A116-00-102

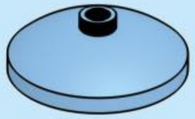

1x
A124-00-212



1x
GDS-90336-DG044

1x
A342-00-DG044



1x
A103-72803-DG017



1x
A102-00-DG017



1x
A994-00-DG017



2x
A875-00-DG017

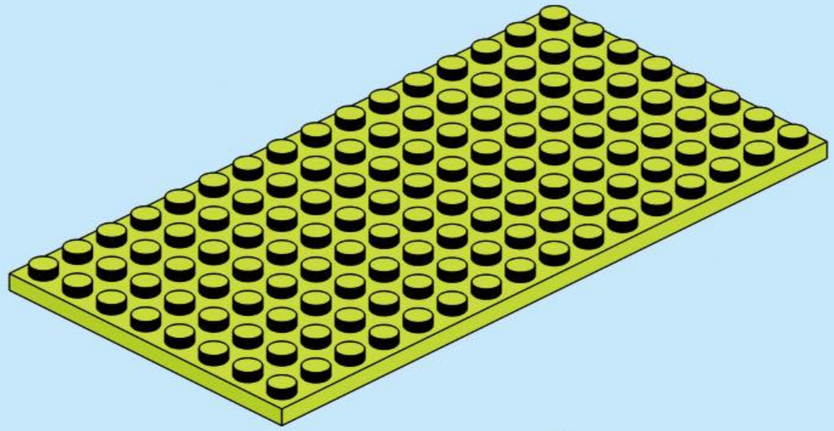

1x
A655-00-119

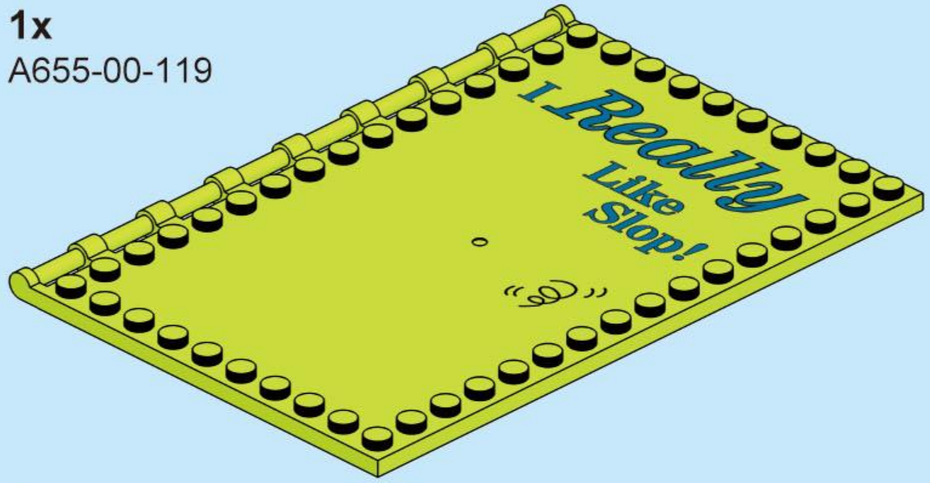

1x
A918-72803-119

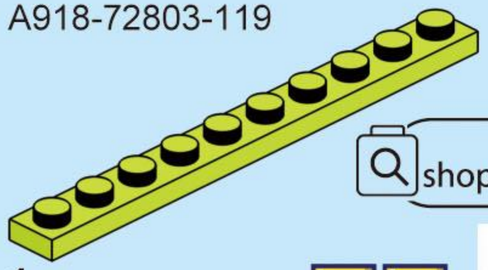

1x
A177-00-119

Need support?
shopbrickcraft.com/service

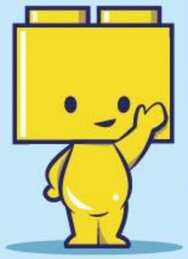

Or scan the QR code!

Extra Parts May Be Included

BRICK CRAFT®

ELEPHANT & PIGGIE

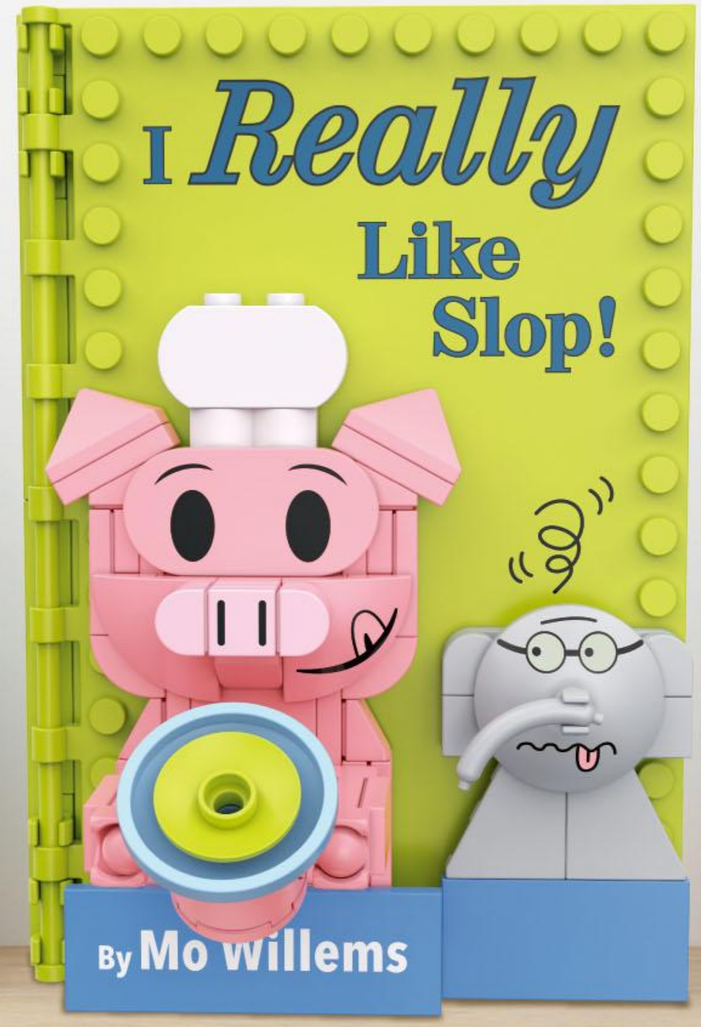





Tell the story with reusable stickers!

COMPATIBLE WITH OTHER NAME BRANDS

BRICKCRAFT, LLC.
NEW YORK, NY 10018

BRICKCRAFT® is a trademark of Brickcraft LLC

SHOPBRICKCRAFT.COM

Made in China
F15907/26L72803

HIDDEN PIGEON COMPANY

HiddenPigeonCompany.com

TM & © Hidden Pigeon, LLC